PASSENGER'S SIDE COMPARTMENTS CONTAIN THE FOLLOWING:

COMPARTMENT P1 CONTAINS:
- (1) OIL DRY HOPPER
- (2) 22"DP ADJ SHELVES
- (1) 20A,120V DUPLEX RECEPTACLE

COMPARTMENT P2 CONTAINS:
- (1) FIXED SHELF
- (1) 89"2-WAY ADJ SLIDE OUT TRAY
- (1) VERTICAL COMPARTMENT DIVIDER
-

COMPARTMENT P3 CONTAINS:
- (1) VERTICAL COMPARTMENT DIVIDER
- (1) 22"DP ADJ SHELF
- CARGO RETENTION NETTING
- (1) ELECTRIC CORD REEL W/200' OF 10/4 YELLOW CORD
- (1) LOW PRESSURE AIR REEL W/200' OF HOSE
-

COMPARTMENT P4 CONTAINS:
- (2) HYDRAULIC REELS W/100' OF DUAL HOSE ON EACH REEL
- (1) 22"DP ADJ SHELF
- (1) 22" FLOOR MOUNTED TRAY WITH ADJUSTABLE TOOLBOARD
-

COMPARTMENT P5 CONTAINS:
- (2) VERTICAL COMPARTMENT DIVIDERS
- (4) 22"DP ADJ SHELVES
- (2) 22"DP ADJ SLIDE OUT TOOLBOARDS
-
-
-

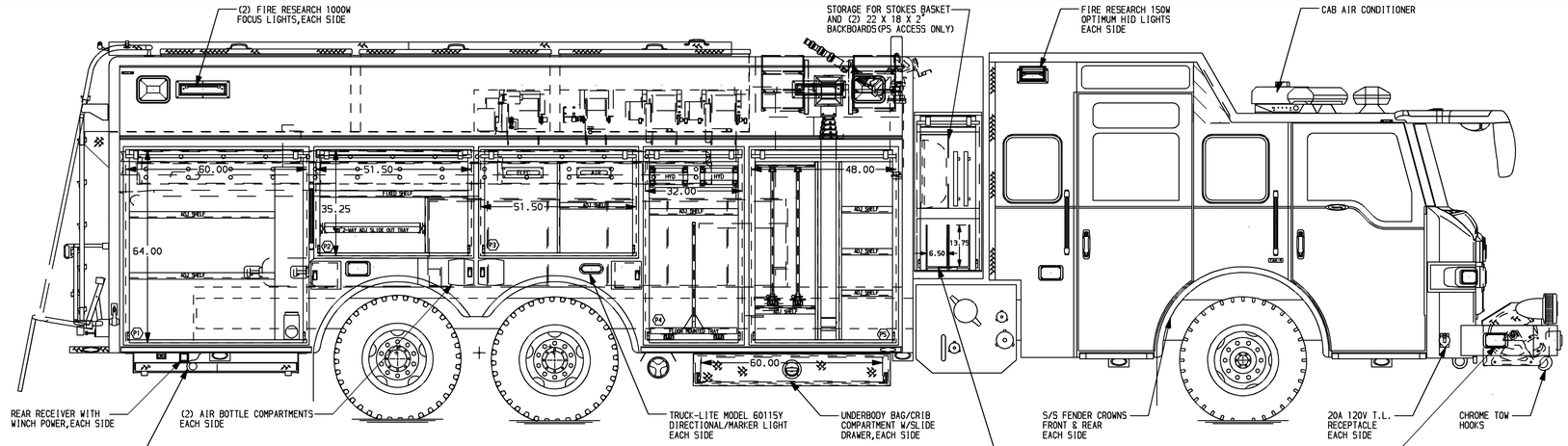

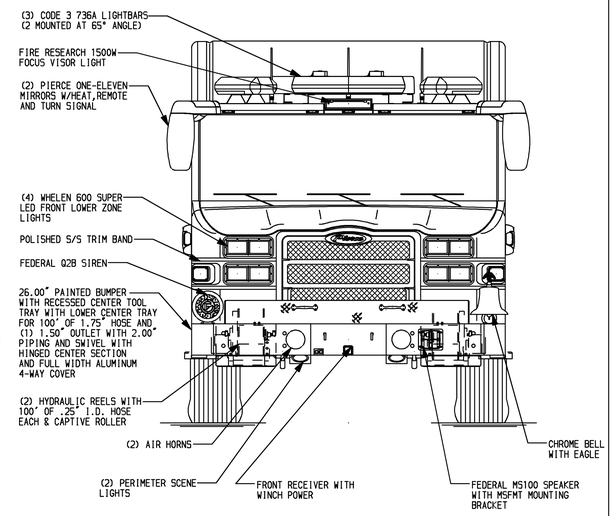

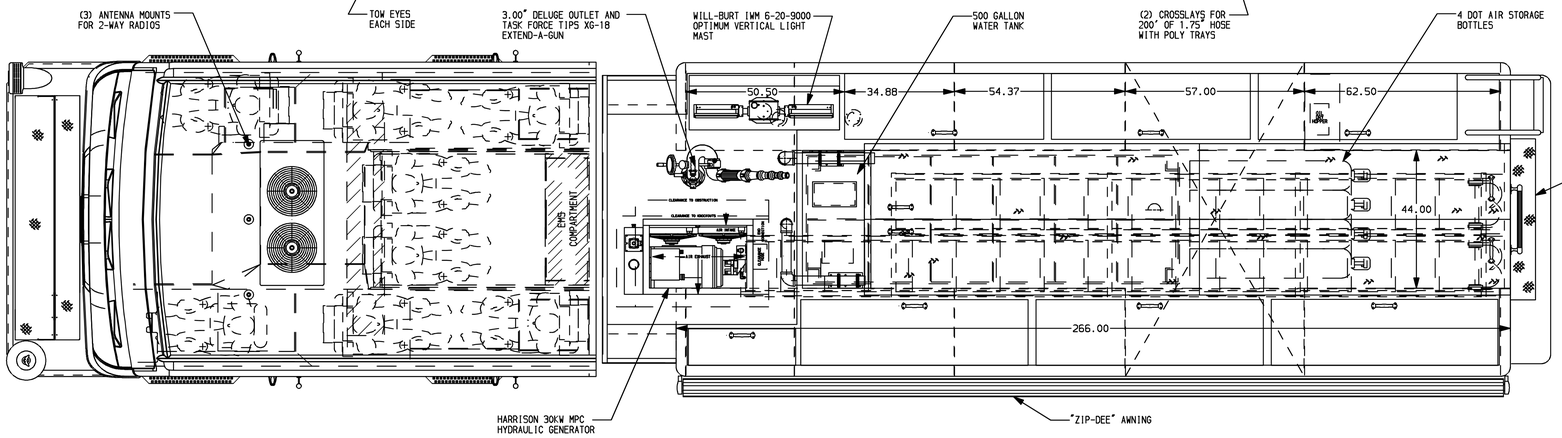

REAR COMPARTMENT CONTAINS THE FOLLOWING:

COMPARTMENT R1 CONTAINS:
- (1) 40"DP ADJ SLIDE OUT TRAY
- (1) HORIZONTAL FLOOR EXTENSION
- (1) 22"DP FLOOR MOUNTED TRAY
-

COMPARTMENT R2 CONTAINS:
- (1) RACK FOR THE FOLLOWING:
  - (1) 28' 2-SECTION LADDER
  - (1) 20' ROOF LADDER
  - (1) 16' ROOF LADDER
  - (1) 10' FOLDING LADDER
  - (6) PIKE POLES
  - (1) 17' LITTLE GIANT ALUMINUM LADDER
  - (1) TRAY FOR PICKETS

DRIVER'S SIDE COMPARTMENTS CONTAIN THE FOLLOWING:

COMPARTMENT D1 CONTAINS:
- (1) 22"DP FIXED SHELF
- (1) 22"DP ADJ SHELF
- (1) RACK FOR 4 AIR BAGS
- (1) "SPACESAVER"2-BOTTLE FILL ENCLOSURE
- (1) CASCADE SYSTEM CONTROL PANEL
- (1) VERTICAL COMPARTMENT DIVIDER
- (1) 20A,120V DUPLEX RECEPTACLE

COMPARTMENT D2 CONTAINS:
- (1) FIXED SHELF
- (1) 89"2-WAY ADJ SLIDE OUT TRAY
- (1) VERTICAL COMPARTMENT DIVIDER
- (1) RACK FOR 2 AIR BAGS

COMPARTMENT D3 CONTAINS:
- (1) VERTICAL COMPARTMENT DIVIDER
- (1) 22"DP ADJ SHELF
- (1) ELECTRIC CORD REEL W/200' OF 10/4 YELLOW CORD
- (1) LOW PRESSURE AIR REEL W/200' OF HOSE
-

COMPARTMENT D4 CONTAINS:
- (2) HYDRAULIC REELS W/100' OF DUAL HOSE ON EACH REEL
- (1) 22"DP ADJ SHELF
- (1) 22" FLOOR MOUNTED TRAY WITH ADJUSTABLE TOOLBOARD
-
-

COMPARTMENT D5 CONTAINS:
- (1) VERTICAL COMPARTMENT DIVIDER
- (1) 22"DP ADJ SHELF
- (1) CIRCUIT BREAKER PANEL
- (1) PUMP PANEL
- (1) KUSSMAUL PUMP PLUS 1200 CHARGER
- (1) SUB FEED BREAKER BOX
-

HOSEBED CAPACITY
A=250' OF 1.75"
B=1000' OF 5".00
C=600' OF 3.00"
D=300' OF 2.50"

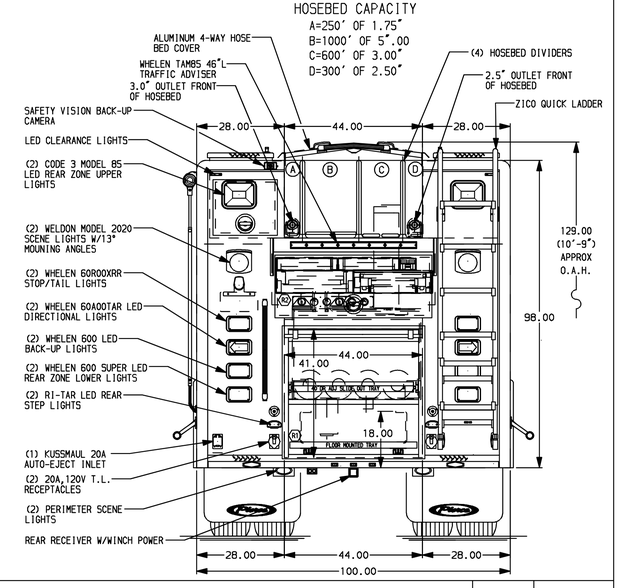

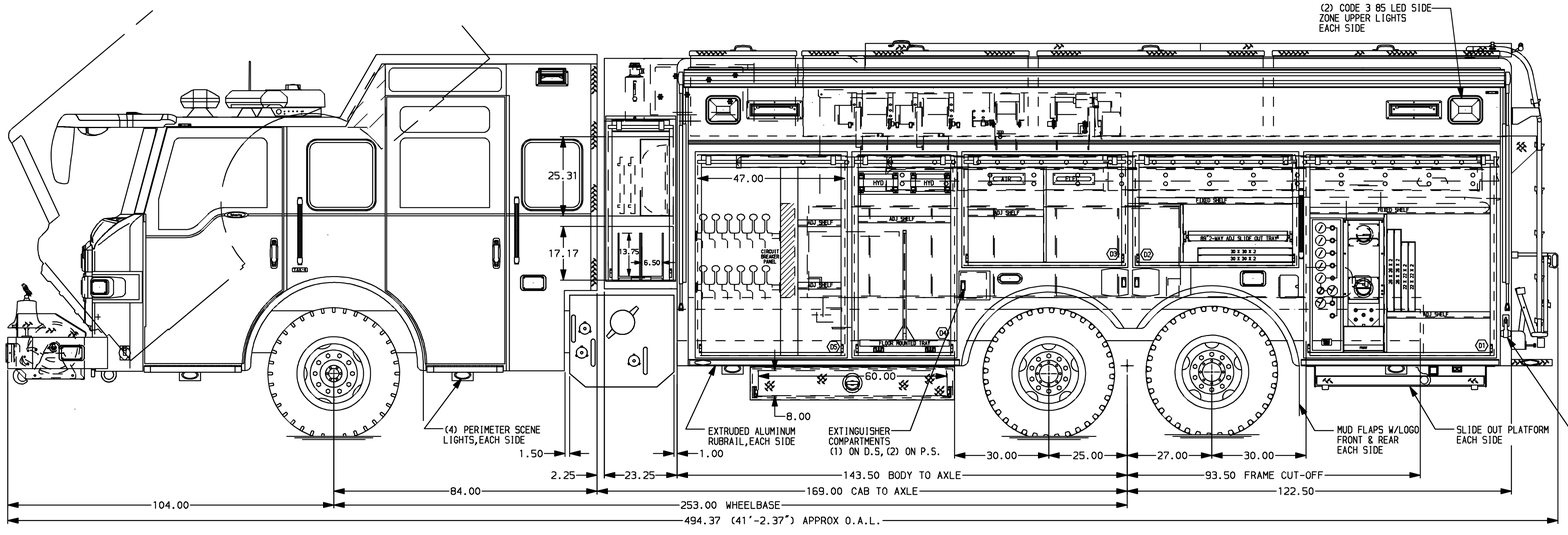

NOTE

DIMENSIONS SHOWN ARE APPROXIMATE AND ARE SUBJECT TO MINOR DEVIATIONS AS MAY OCCUR OR BE NECESSARY IN CONSTRUCTION.
MINOR DETAILS NOT SHOWN.

NOTES:
1. AIR INLET WITH DISCONNECT COUPLING LOCATED IN DRIVER'S SIDE LOWER STEP WELL OF CAB
2. FLOOR IN CAB AND CREW CAB TO BE PADDED RUBBER
3. ALUMINUM 4-WAY SCUFFPLATES ON REAR CAB CORNERS
4. S/S SCUFFPLATES ON CAB DOOR JAMBS
5. WARN 9,000# PORTABLE WINCH
6. KUSSMAUL PUMP PLUS 1200 CHARGER LOCATED BELOW CARGO FLOOR
7. S/S ROLL-UP DOOR GUARDS ON ALL COMPARTMENT DOORS
8. PULL STRAPS ON ALL ROLL-UP DOORS
9. POLISHED S/S SCUFFPLATES ON BOTTOM OF DOOR FRAMES
10. ON SCENE COMPARTMENT LIGHTS ON EACH SIDE OF DOOR FRAME

MAXIMUM O.A.L. 41'-0"
MAXIMUM O.A.H. 10'-9"

CUSTOMER APPROVAL
APPROVED BY:
DATE:

REV	DATE	BY	CH
7	13FEB09	DHE	BJB
6	08SEP08	DHE	TEO

CHASSIS DATA
MAKE: PIERCE
MODEL: VX8420

Pierce MANUFACTURING INC.

TITLE: HEAVY DUTY RESCUE
NON-WALKIN/PUC WITH 500 GALLON WATER TANK
FOR: CORNWELLS FIRE CO #1
CORNWELLS,PA

DWG NO. 21420AD

JOB NO.	21420
SCALE	1:24
DATE	
DRAWN BY	DHE 12AUG08
CHECKED BY	TEO 29AUG08
SHEET SIZE	D
SHEET NO.	1 OF 1

View File Created 06-MAY-2009 15:58:30