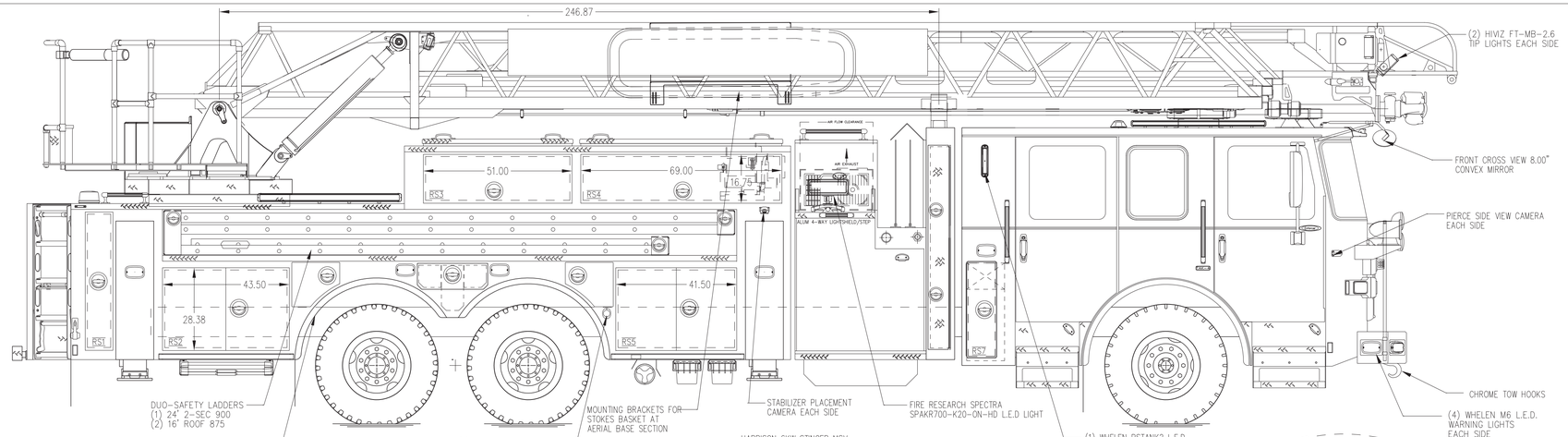

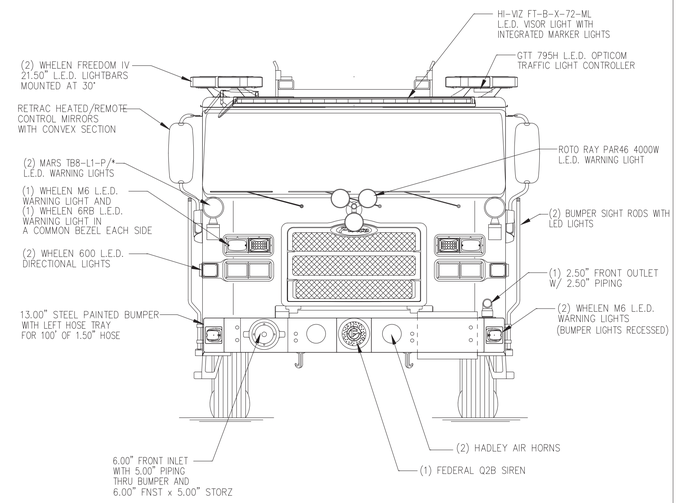

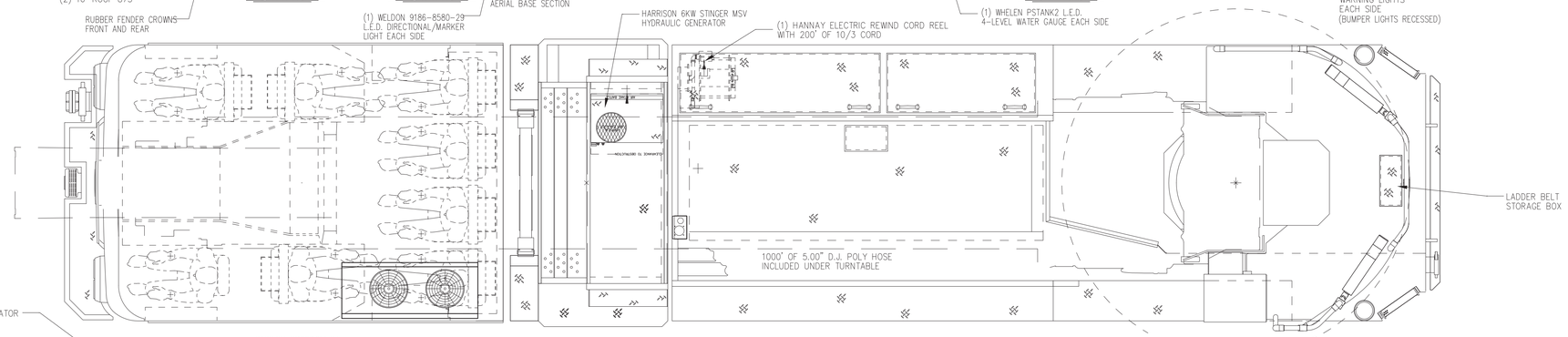

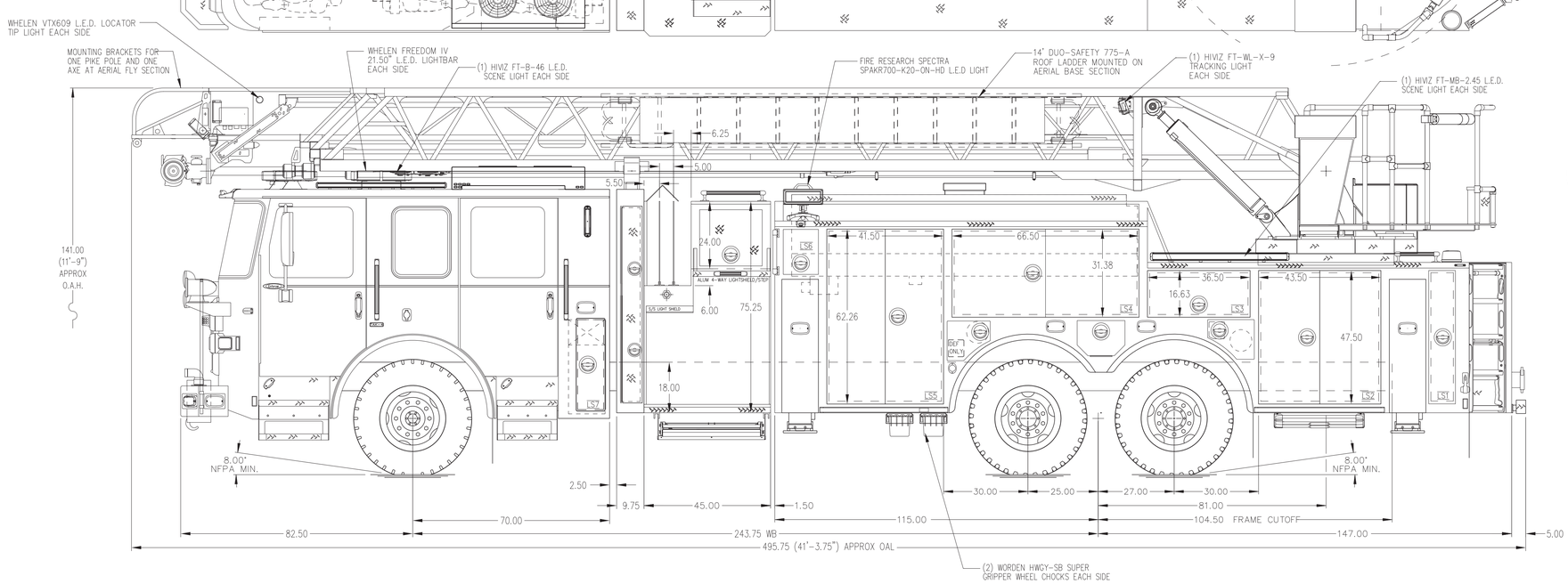

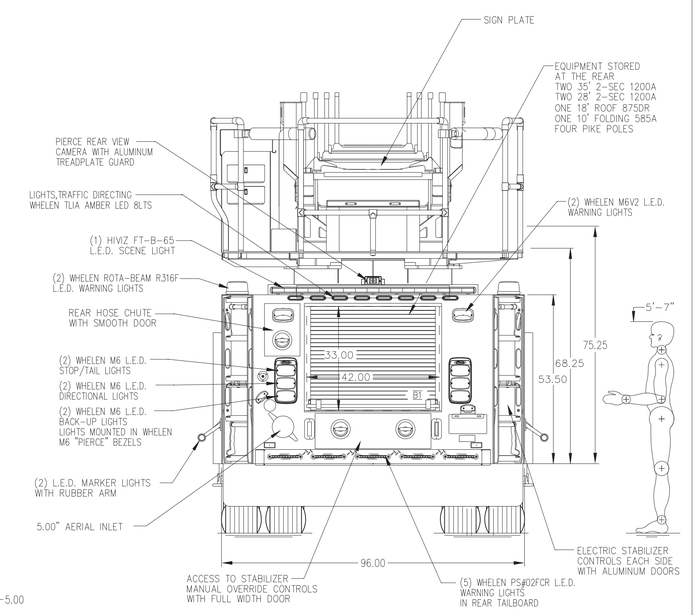

ALUMINUM BODY

SIDE ROLL AND FRONTAL IMPACT PROTECTION

NOTE

DIMENSIONS SHOWN ARE APPROXIMATE AND ARE SUBJECT TO MINOR DEVIATIONS AS MAY OCCUR OR BE NECESSARY IN CONSTRUCTION.
MINOR DETAILS NOT SHOWN.

1. SHORELINE RECEPTACLE WITH KUSSMAUL SUPER AUTO-EJECT LOCATED IN THE DRIVER SIDE STEPWELL
2. AIR INLET WITH DISCONNECT COUPLING IN THE DRIVER SIDE STEPWELL
3. BATTERY CHARGER LOCATED BEHIND THE DRIVER SEAT
4. STABILIZER COMPARTMENTS MODIFIED FOR 18" GROUND PENETRATION
5. TRIDENT FOLDING STEPS ON AERIAL DEVICE
6. AERIAL PEDESTAL RAISED 3.00"
7. LIFTING EYE ROPE RESCUE ATTACHMENT AT AERIAL TIP
8. 1500 GPM HIGH FLOW WATERWAY

REV	DATE	BY	CH
B	14NOV23	KRG	–
A	09OCT23	KRG	–

CHASSIS DATA — MAKE: PIERCE — MODEL: ENFORCER

Pierce MANUFACTURING INC.

TITLE: 107' ASCENDANT AERIAL LADDER AND BODY ASSEMBLY 500 GAL TANK

FOR: LLANERCH VOLUNTEER FIRE COMPANY HAVERTOWN, PA

DWG NO.: PRELIMINARY PRINT ONLY

PROPOSAL	910
SCALE	1:24
DATE	
DRAWN BY	KRG
	20SEP2023
CHECKED BY	N/A
	N/A
SHEET SIZE	D
SHEET NO.	1 OF 1