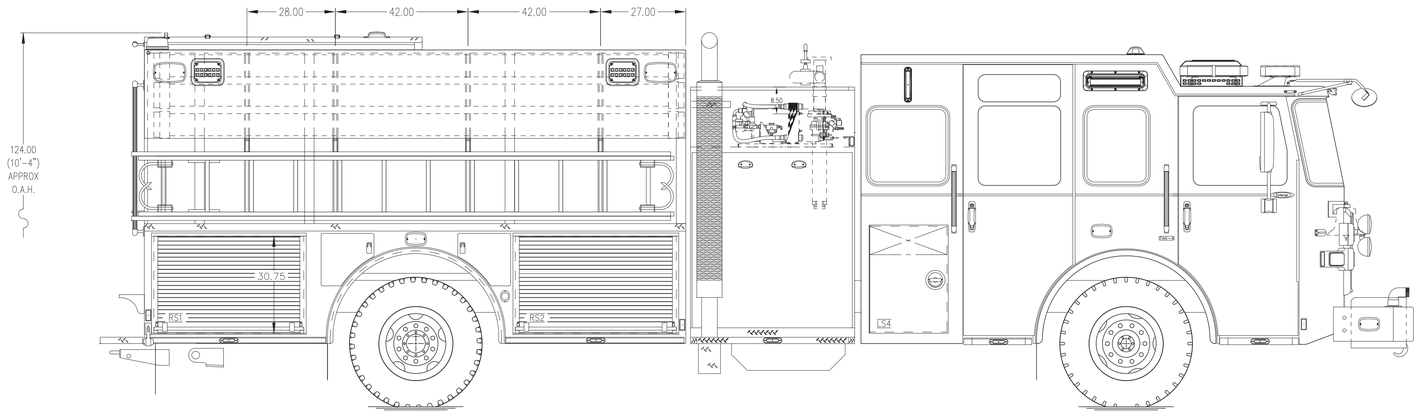

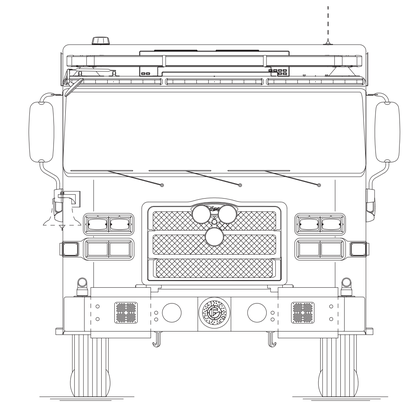

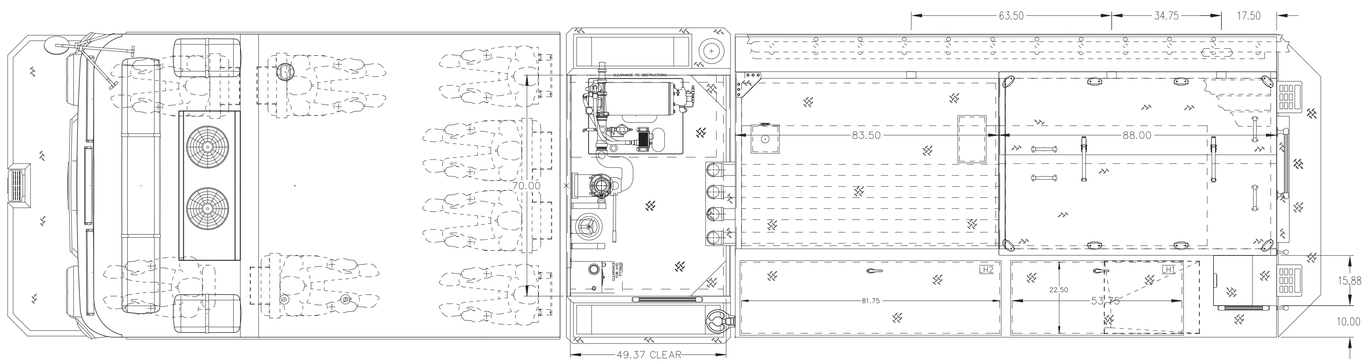

HOSEBED CAPACITIES

1 – 400' OF 2.00" MERCEDES AQUAFLOW-PLUS IN A POLY TRAY
2 – 300' OF 1.75" MERCEDES AQUAFLOW-PLUS IN A POLY TRAY
3 – 250' OF 2.50" MERCEDES AQUAFLOW-PLUS IN A POLY TRAY
4 – 600' OF 3.00" MERCEDES AQUAFLOW-PLUS SINGLE STACKED
5 – 1600' OF 5.00" MERCEDES MEGAFLOW BREATHER

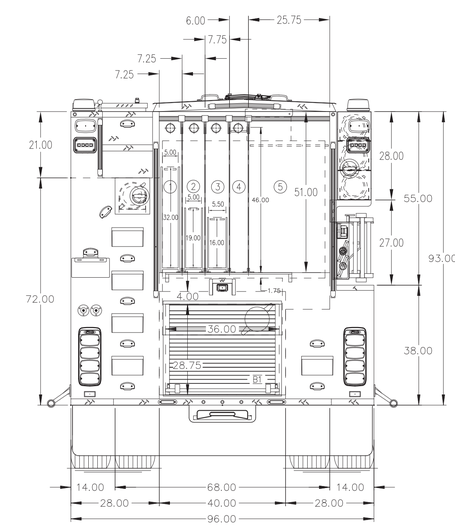

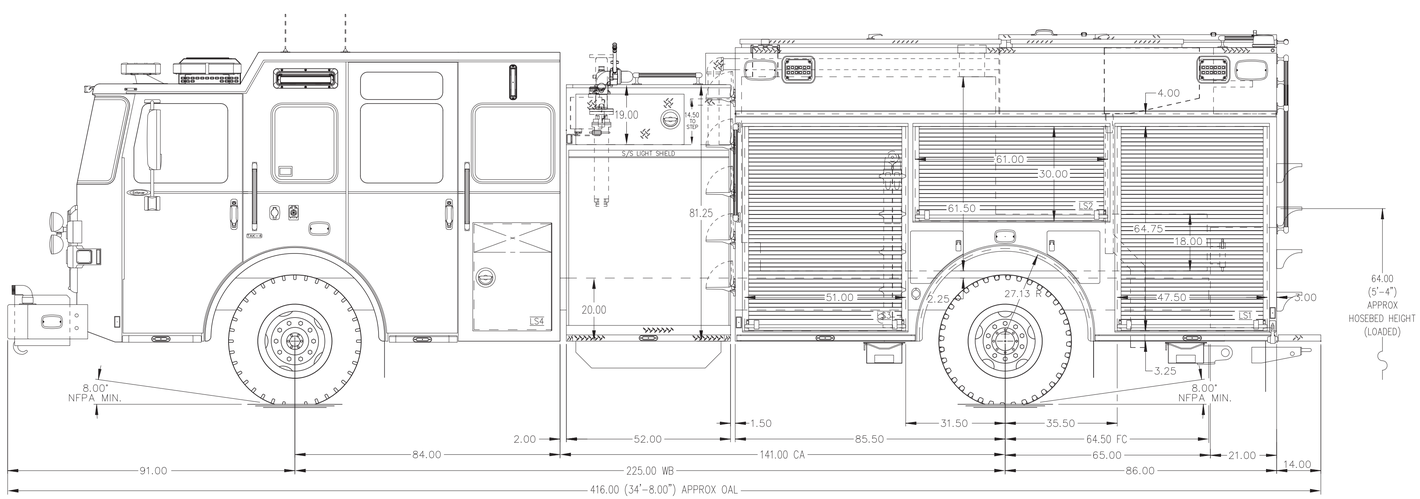

ALUMINUM BODY

MAXIMUM O.A.H. 124.00"

SIDE ROLL AND FRONTAL IMPACT PROTECTION

NOTE
DIMENSIONS SHOWN ARE APPROXIMATE AND ARE SUBJECT TO MINOR DEVIATIONS AS MAY OCCUR OR BE NECESSARY IN CONSTRUCTION.
MINOR DETAILS NOT SHOWN.

REV	DATE	BY	CH
5	26APR23	KRG	–
4	08FEB23	KRG	–
3	17JAN23	KRG	–
2	22DEC22	KRG	–

CHASSIS DATA
MAKE: PIERCE
MODEL: ENFORCER

Pierce MANUFACTURING INC.

TITLE: 2000-D-1050P, 1000G WATER, 50G FOAM, 171" FDLER BODY RS LADDER BRACKETS, CAFS, DELUGE, 52" SIDE CONTROL
FOR: HAND IN HAND FIRE COMPANY BIRD-IN-HAND, PA
DWG NO.: PRELIMINARY PRINT ONLY

PROPOSAL	826
SCALE 1:24	DATE
DRAWN BY KRG	07DEC2022
CHECKED BY N/A	N/A
SHEET SIZE D	SHEET NO. 1 OF 1