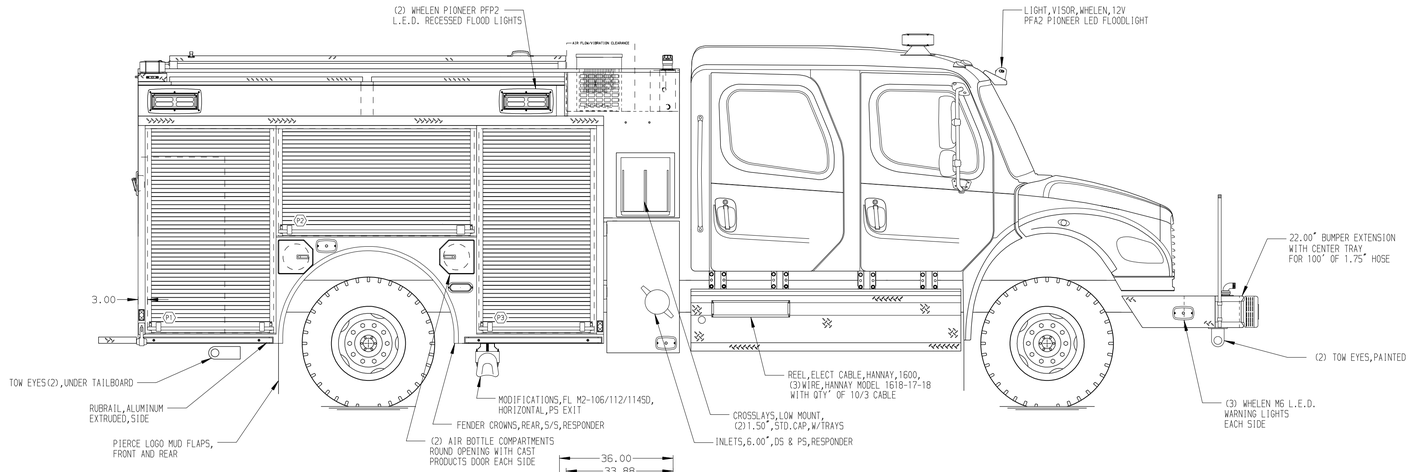

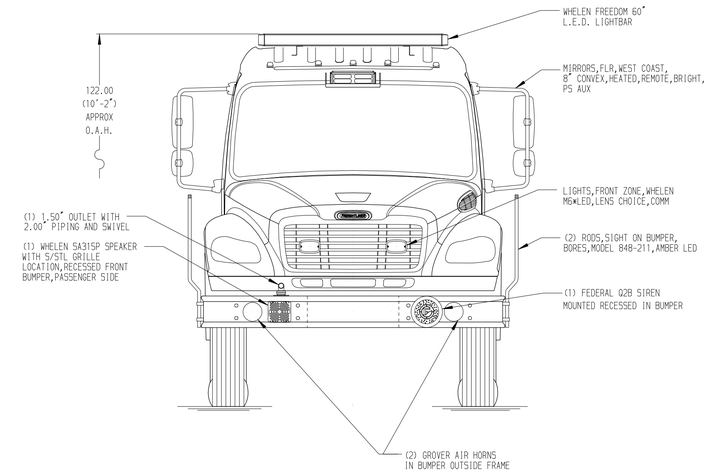

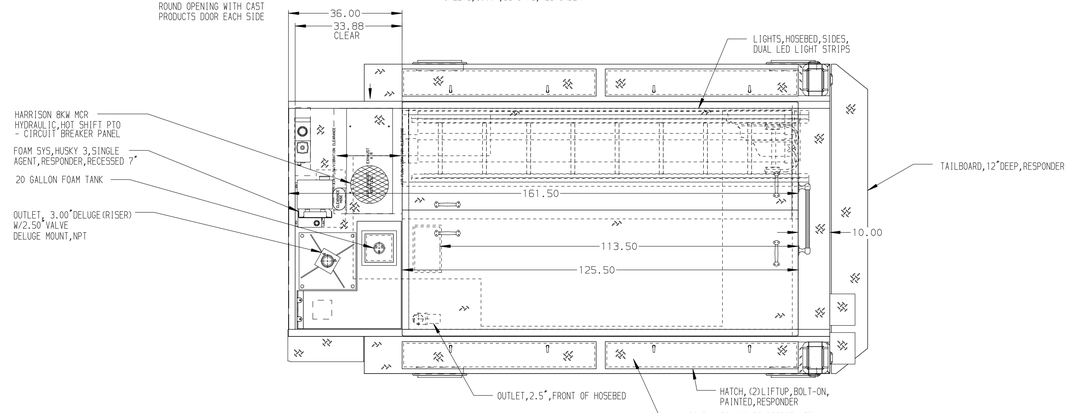

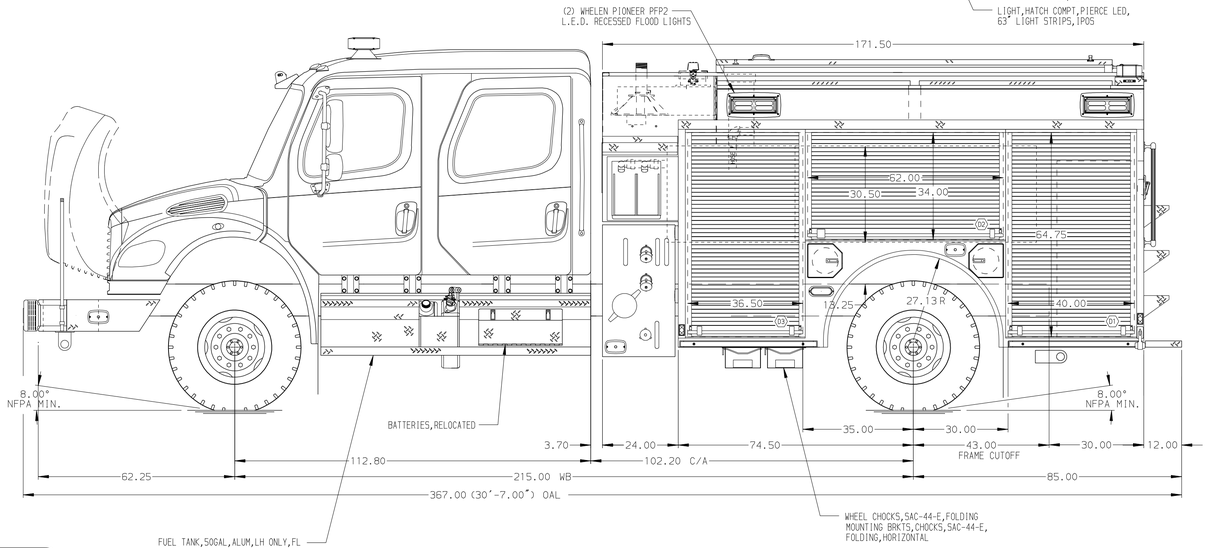

HOSEBED CAPACITIES

1. 250' OF 2.50" D.J. POLYESTER HOSE
2. 250' OF 3.00" D.J. RUBBER HOSE
3. 750' OF 5.00" D.J. RUBBER HOSE

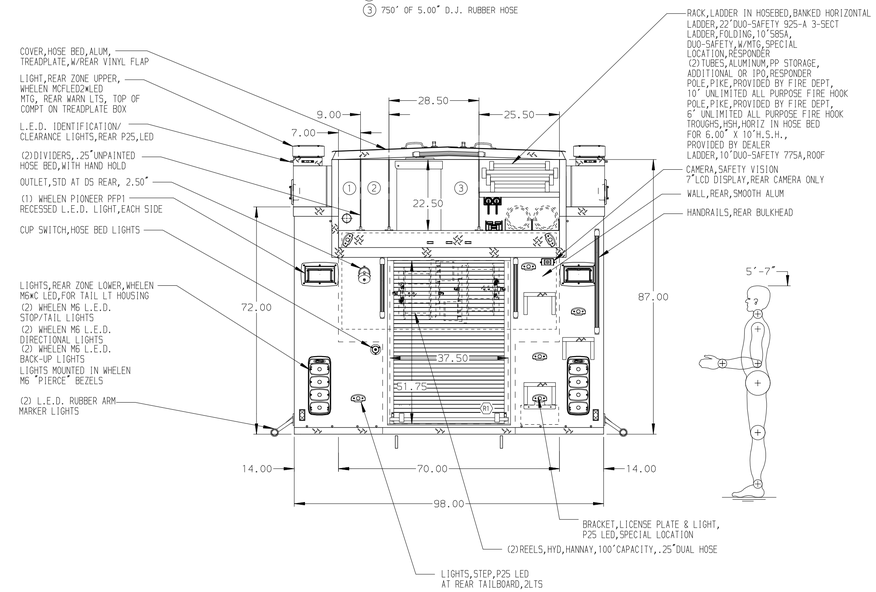

ALUMINUM BODY

MAXIMUM O.A.L. 367.00"

MAXIMUM O.A.H. 122.00"

NOTE

DIMENSIONS SHOWN ARE APPROXIMATE AND ARE SUBJECT TO MINOR DEVIATIONS AS MAY OCCUR OR BE NECESSARY IN CONSTRUCTION.
MINOR DETAILS NOT SHOWN.

REV	DATE	BY	CH
5	05FEB16	JLA	-
4	08DEC15	JLA	GSC
3	09OCT15	RWI	JAF

CHASSIS DATA
MAKE: FL
MODEL: M2 106

Pierce MANUFACTURING INC.
BRADENTON, FLORIDA

TITLE: 1250-D-750 POLY 147.5"BODY DS & PS FULL HEIGHT (2)SPEEDLAYS

FOR: COMMUNITY FIRE COMPANY OF CORNWALL BOROUGH
LEBANON,PENNSYLVANIA

DWG NO. 29530AD

JOB NO. 29530
SCALE 1:24
DATE
DRAWN BY JAF 21SEP15
CHECKED BY RWI 23SEP15
SHEET SIZE D
SHEET NO. 1 OF 1