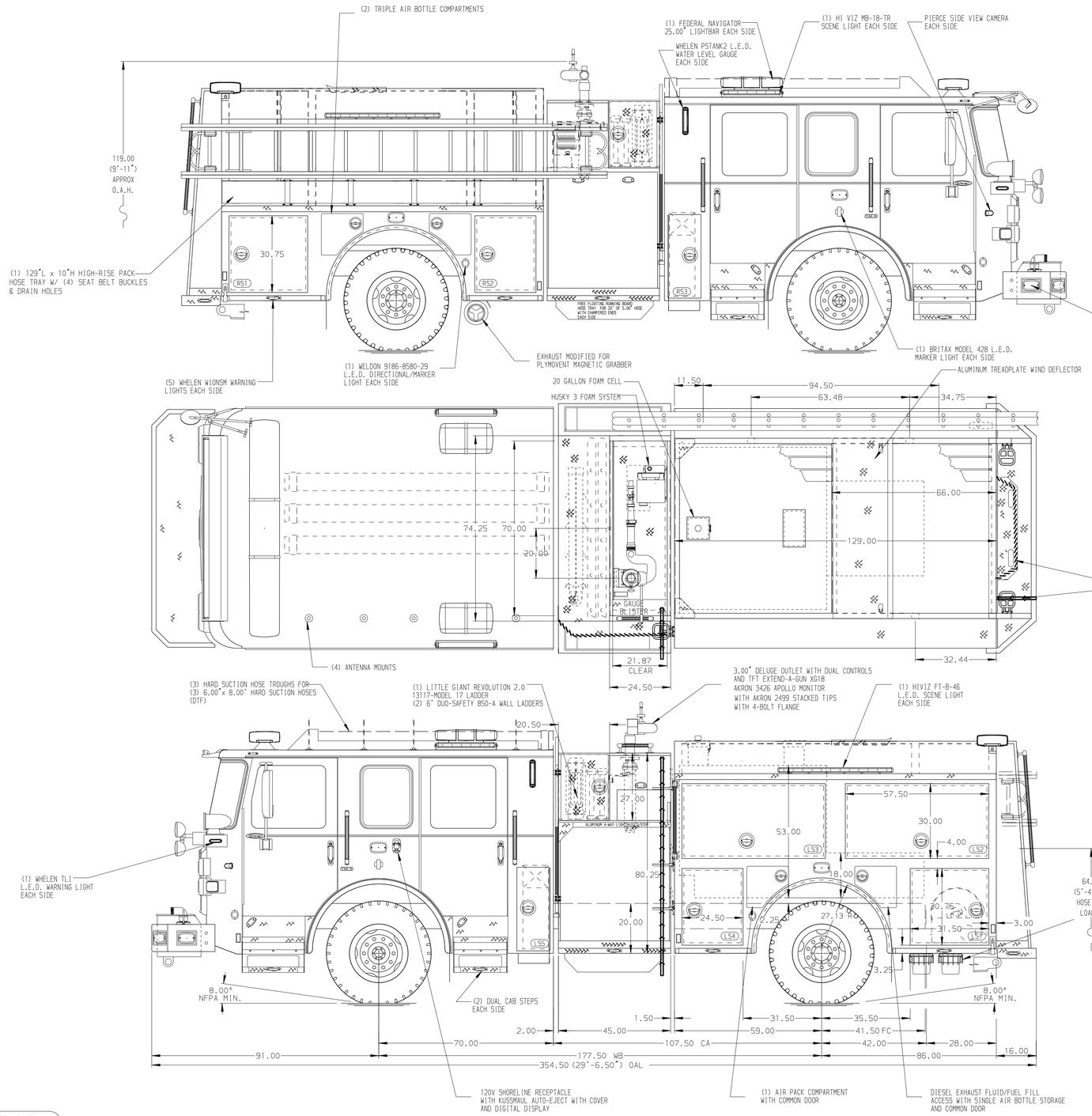

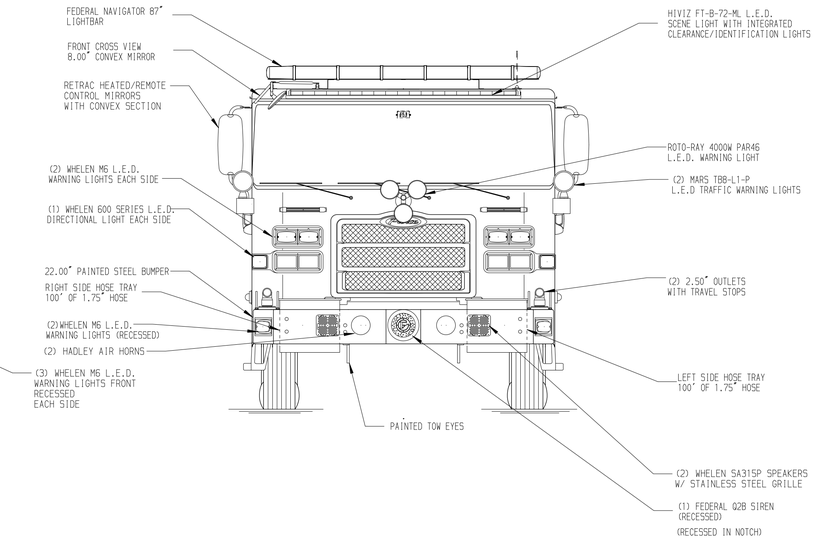

HOSEBED CAPACITIES

1. 200' OF 2.50" DJ POLY HOSE
2. 200' OF 1.75" DJ POLY HOSE
3. 1550' OF 4.00" KEY ECHO 10 HOSE
4. 400' OF 1.75" DJ POLY HOSE
5. 200' OF 2.50" DJ POLY HOSE

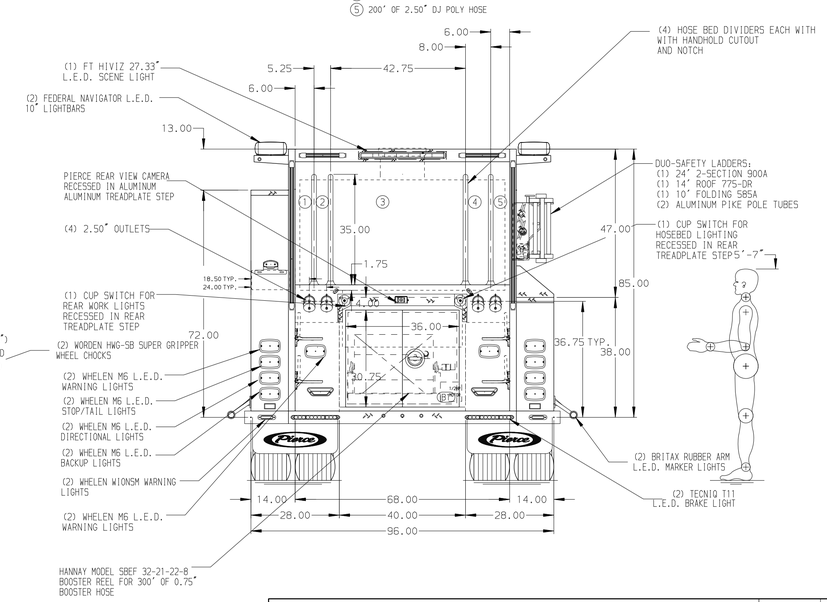

ALUMINUM BODY

NOTE

DIMENSIONS SHOWN ARE APPROXIMATE AND ARE SUBJECT TO MINOR DEVIATIONS AS MAY OCCUR OR BE NECESSARY IN CONSTRUCTION.
MINOR DETAILS NOT SHOWN.

1. AIR INLET WITH DISCONNECT COUPLING IN THE DRIVER SIDE PUMP PANEL
2. BATTERY CHARGER LOCATED PER ORDER
3. ONE FLOOR MOUNTED SLIDE-OUT TRAY LOCATED PER ORDER
4. ONE ADJUSTABLE SLIDE-OUT TRAY IN COMPARTMENT PER ORDER
5. ROSCO DV_XC4 DUAL FORWARD AND INTERIOR CAMERA MOUNTED INSIDE OF FRONT WINDSHIELD
6. TWO 3/16" MOUNTING PLATES LOCATED PER SHOP ORDER

REV	DATE	BY	CH
F	02FEB24	LST	ZWE
E	24JAN24	LST	ZWE
D	23JAN24	LST	ZWE
C	27OCT23	LST	ZWE
B	28AUG23	LST	ZWE

CHASSIS DATA — MAKE: PIERCE — MODEL: ENFORCER

TITLE: 2000-D-720P, 700 WATER, 20 FOAM, 129" BODY 45" SIDE CONTROL PH, NY HOSEBED, LADDERS ON RS BRACKET

FOR: MORRISVILLE FIRE COMPANY MORRISVILLE, PA

DWG NO.: 38280AD

Pierce MANUFACTURING INC.

JOB NO.	38280
SCALE	1:24
DATE	
DRAWN BY	LST 03MAR23
CHECKED BY	CDU 27MAR23
SHEET SIZE	D
SHEET NO.	1 OF 1

View File Created 02-FEB-2024 08:43:13