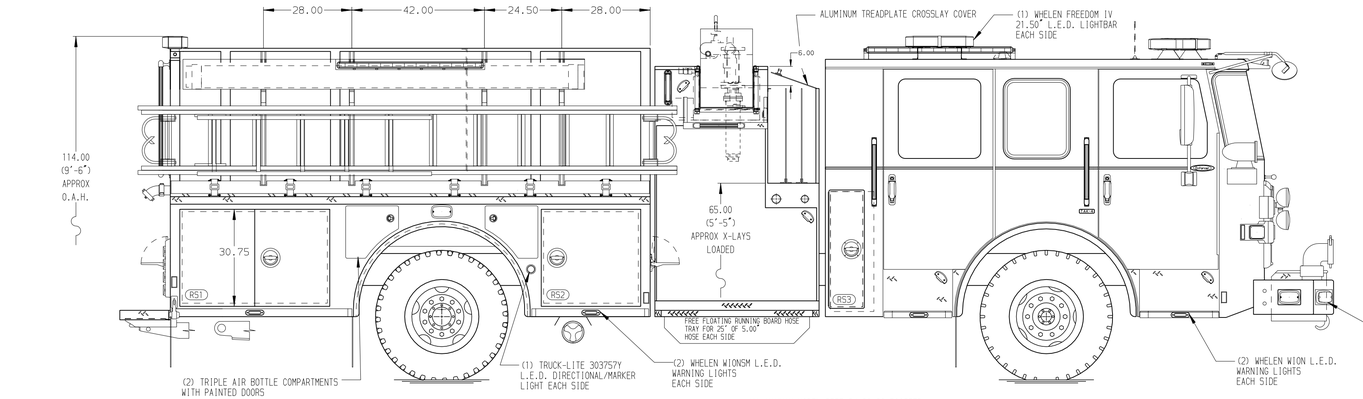

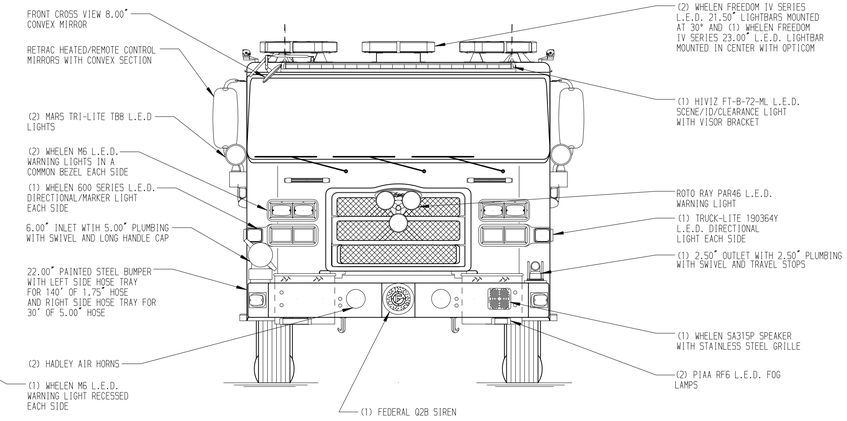

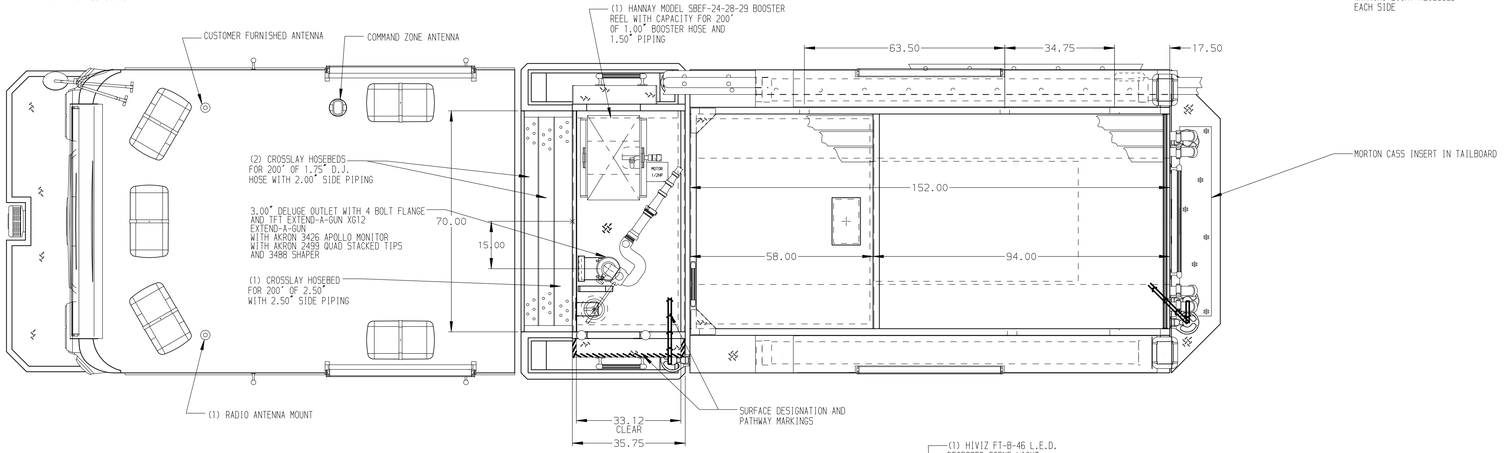

HOSEBED CAPACITIES

1. 300' OF 1.75" MERCEDES AQUAFLOW
2. 300' OF 2.50" MERCEDES AQUAFLOW
3. 300' OF 3.00" MERCEDES AQUAFLOW
4. 600' OF 3.00" MERCEDES AQUAFLOW
5. 1200' OF 5.00" MERCEDES MEGAFLOW
6. 300' OF 2.50" MERCEDES AQUAFLOW
7. 300' OF 1.75" MERCEDES AQUAFLOW

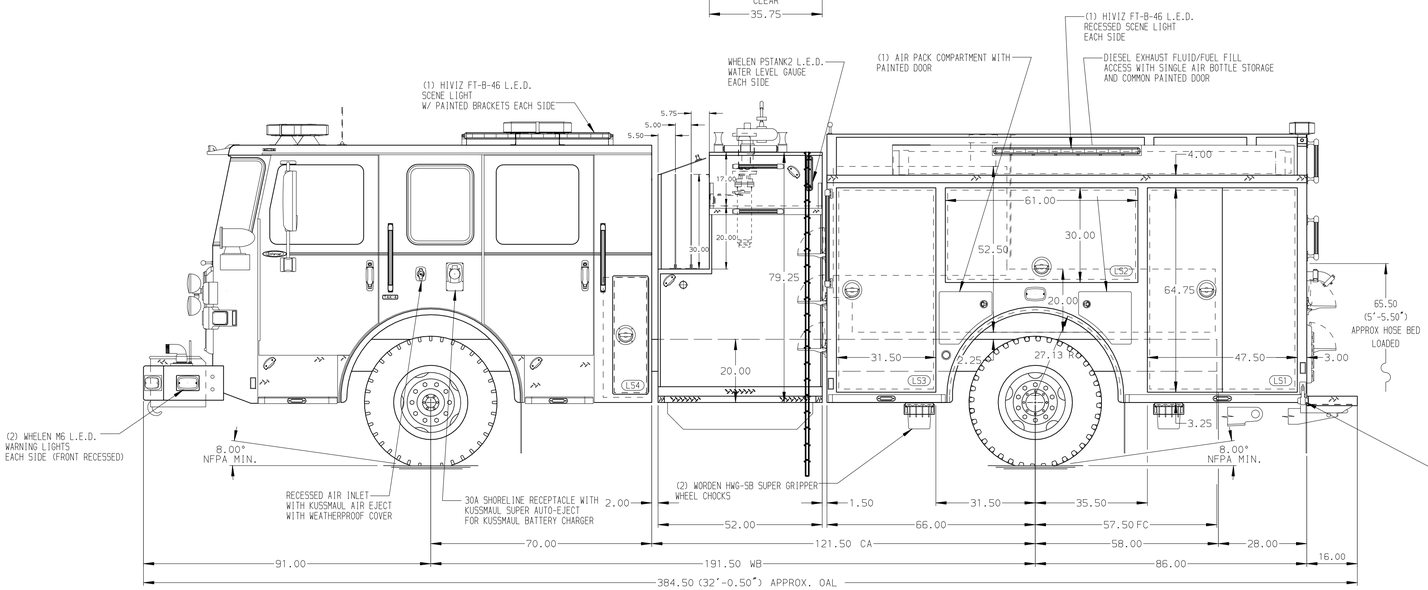

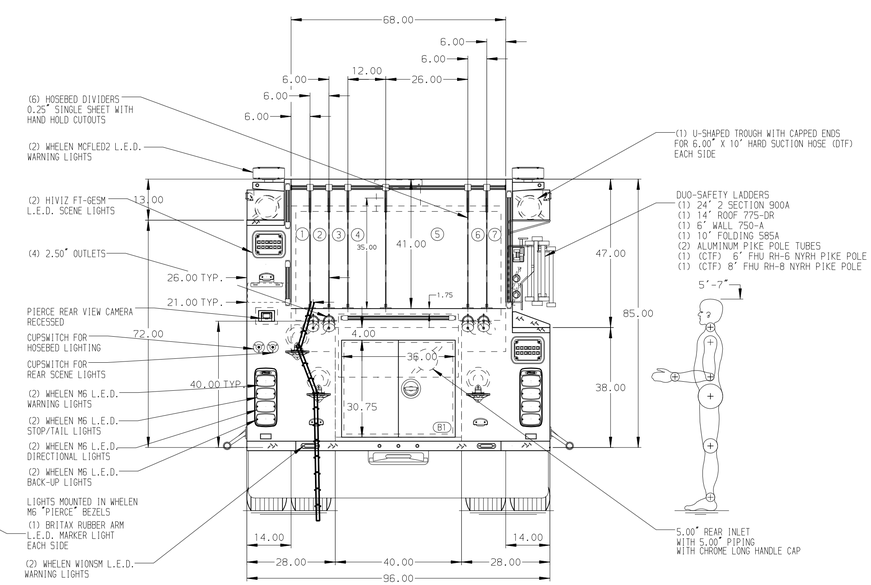

ALUMINUM BODY | MAXIMUM O.A.H. 117.00" | MAXIMUM O.A.L. 385.00" | SIDE ROLL AND FRONTAL IMPACT PROTECTION

NOTE

DIMENSIONS SHOWN ARE APPROXIMATE AND ARE SUBJECT TO MINOR DEVIATIONS AS MAY OCCUR OR BE NECESSARY IN CONSTRUCTION.
MINOR DETAILS NOT SHOWN.

1. ONSPOT AUTOMATIC TIRE CHAINS TO BE PROVIDED AT REAR
2. BATTERY CHARGER LOCATED PER SHOP ORDER
3. BATTERY CHARGER INDICATOR LOCATED PER SHOP ORDER
4. DUAL L.E.D. LIGHT STRIPS LOCATED IN HOSE BED
5. L.E.D. LIGHT STRIP LOCATED ON THE FRONT OF THE HOSEBED
6. REVERSED HINGED DOOR FOR LS3
7. FIVE FULL WIDTH/DEPTH ADJUSTABLE SHELVES LOCATED PER SHOP ORDER
8. ONE FULL WIDTH/DEPTH FLOOR MOUNTED SLIDE-OUT TRAY WITH SIDE SLIDES LOCATED PER SHOP ORDER
9. PARTITION BETWEEN COMPARTMENTS LS1/B1 AND RS1/B1
10. ONE VERTICAL PARTITION LOCATED PER SHOP ORDER
11. FOUR DRAIN HOLES WITH SPLASH GUARD LOCATED PER SHOP ORDER
12. THREE ALUMINUM PEGBOARDS ON BACK WALL PER SHOP ORDER
13. EIGHT 120V NEMA DUPLEX RECEPTACLES LOCATED PER SHOP ORDER

REV	DATE	BY	CH
E	01MAY23	LST	-
D	23MAR23	LST	CSH
C	15FEB23	LST	CSH
B	31AUG22	CDU	CZA
A	25AUG22	CDU	CZA

CHASSIS DATA
MAKE: PIERCE
MODEL: ENFORCER

Pierce MANUFACTURING INC.

TITLE: 1500-D-750P,152" PUMPER BODY,LS FH FDLR,RS LOW RIGHT SIDE LADDER BRACKETS,52" SIDE CONTROL,DELUGE

FOR: HAMPDEN TOWNSHIP VOLUNTEER FIRE COMPANY
MECHANICSBURG, PENNSYLVANIA

DWG NO.: 37658AD

JOB NO.	37658
SCALE 1:24	DATE
DRAWN BY LST	15AUG22
CHECKED BY WKL	15AUG22
SHEET SIZE D	SHEET NO. 1 OF 1