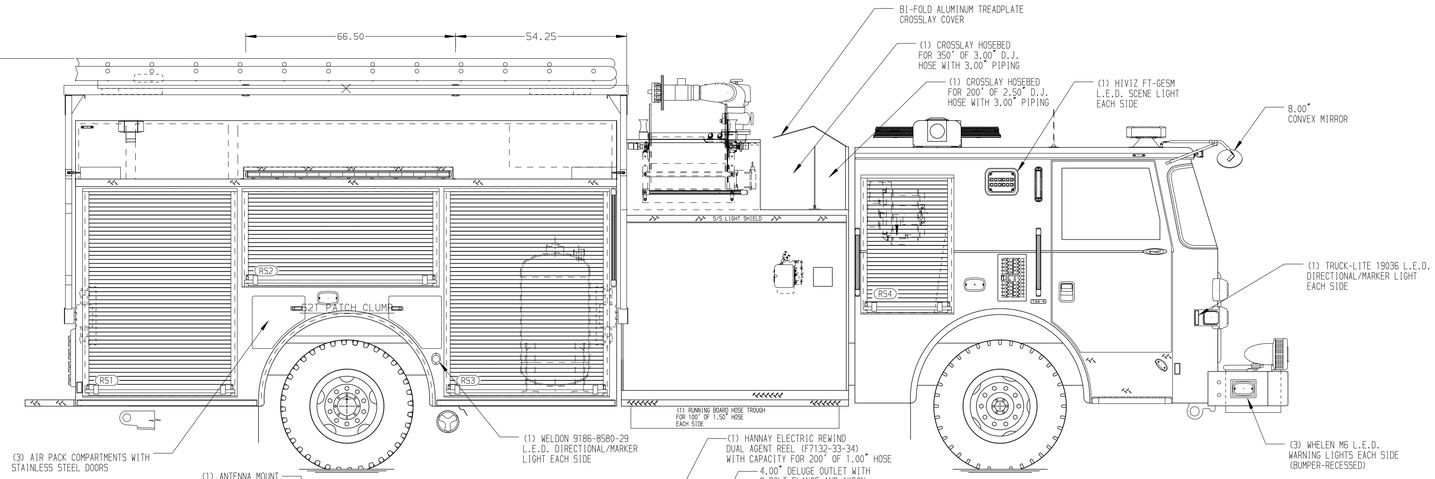

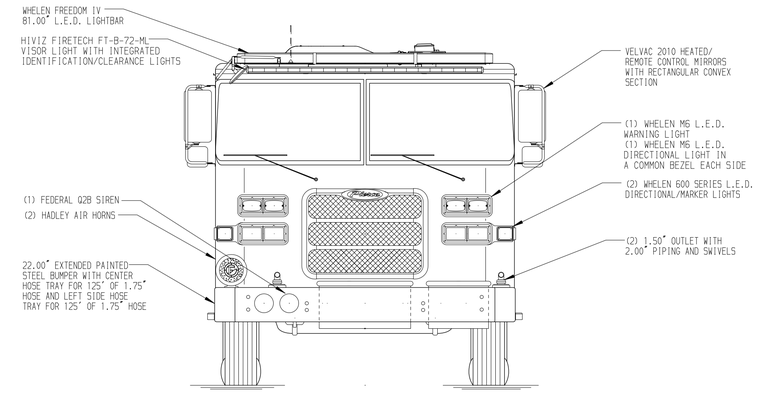

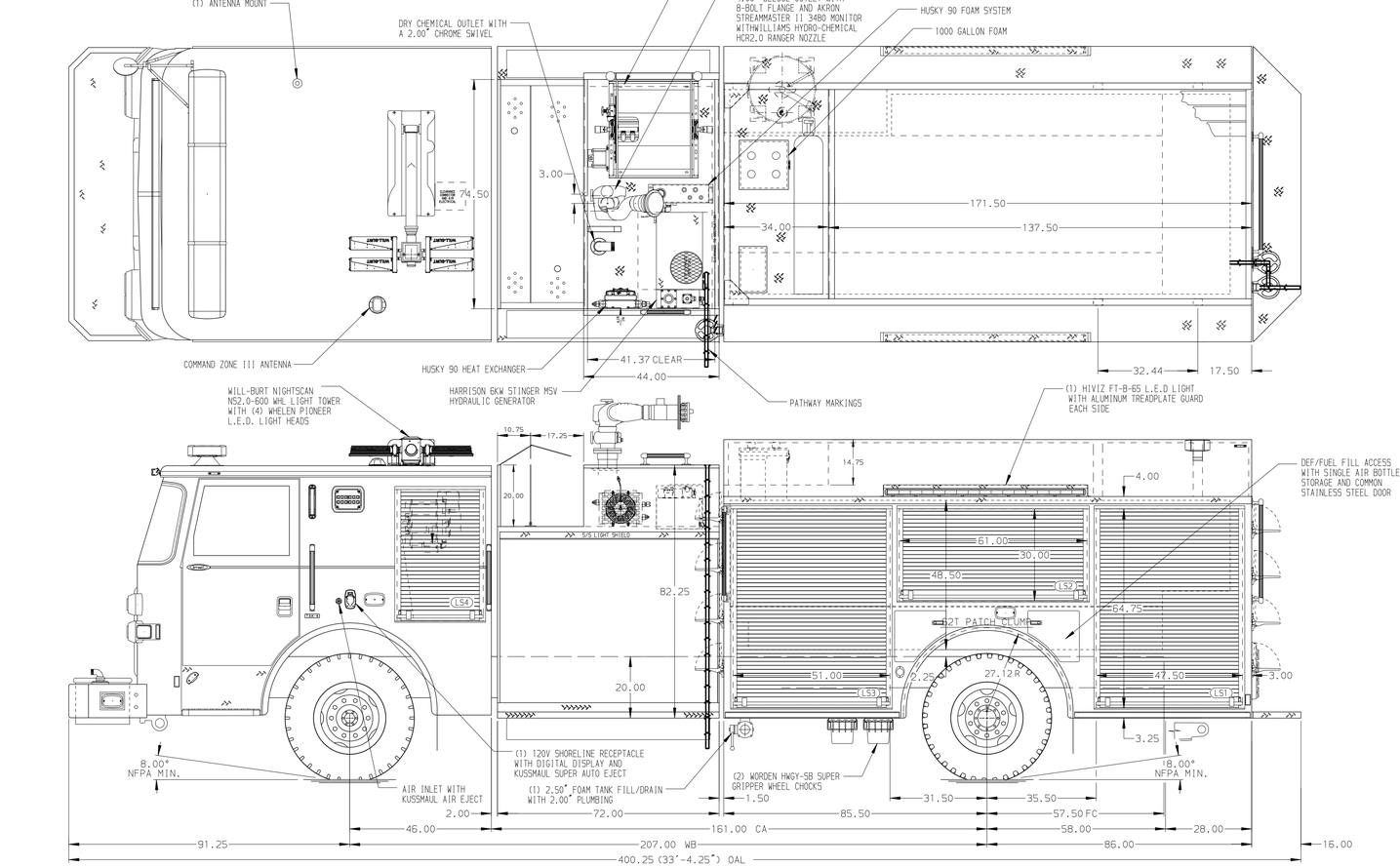

HOSEBED CAPACITIES

1. 1000' OF 5.00" LDH
2. 400' OF 3.00" D.J. HOSE
3. 400' OF 3.00" D.J. HOSE

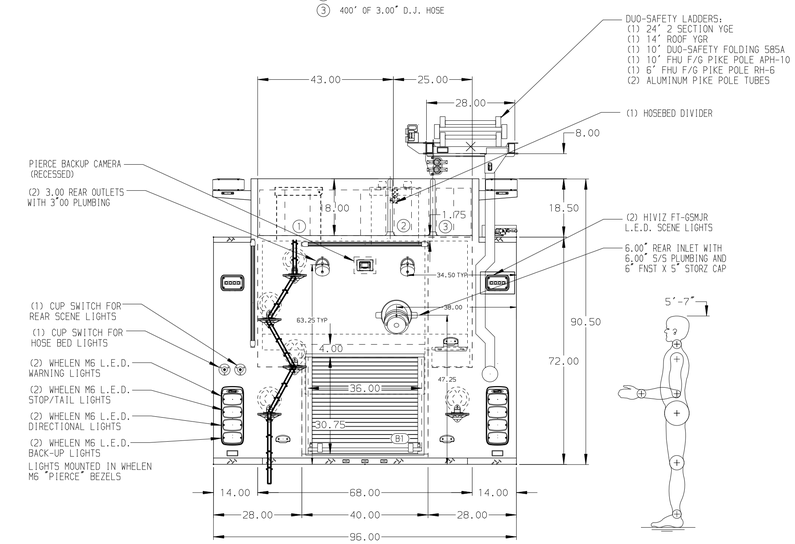

ALUMINUM BODY

FRONTAL IMPACT PROTECTION

NOTE

DIMENSIONS SHOWN ARE APPROXIMATE AND ARE SUBJECT TO MINOR DEVIATIONS AS MAY OCCUR OR BE NECESSARY IN CONSTRUCTION.
MINOR DETAILS NOT SHOWN.

1. BATTERY CHARGER/COMPRESSOR BEHIND PASSENGER'S SEAT WITH COVER
2. DUAL L.E.D. LIGHT STRIPS LOCATED IN HOSE BED
3. FOUR FULL WIDTH/DEPTH ADJUSTABLE SHELVES LOCATED PER ORDER
4. TWO FLOOR MOUNTED SLIDE-OUT TRAYS LOCATED PER ORDER
5. TWO FLOOR MOUNTED SLIDE-OUT TRAYS W/SIDE SLIDES LOCATED PER ORDER
6. ONE SWING-OUT TOOL BOARD WITH PEGBOARD PATTERN LOCATED PER ORDER
7. PARTITION BETWEEN COMPARTMENTS LS1/B1 AND RS1/B1
8. FOUR TOOL BOARDS MOUNTED ON THE BACK WALL LOCATED PER ORDER
9. CIRCUIT BREAKER PANEL LOCATED PER ORDER
10. SCBA (6) BOTTLE RACK LOCATED PER ORDER
11. TWO HANNAY ELECTRIC REWIND CORD REELS MODEL E1616-17-18 LOCATED PER ORDER WITH 150' OF 10/3 CABLE

REV	DATE	BY	CH	
E	13DEC23	KLE	NPE	CHASSIS DATA
D	29SEP23	NPE	NPE	
C	18JUL23	NPE	CDU	MAKE
B	29JUN23	LME	NPE	PIERCE
A	14APR23	LME	NPE	MODEL
				ARROW XT

Pierce MANUFACTURING INC.

TITLE: 2250-D-1500P, 500 WATER W/1000 FOAM, 171" INDUSTRIAL (2) CROSSLAYS, DELUGE, GENERATOR, HYD. LADDER RACK

FOR: UNITED STATES STEEL
PITTSBURGH, PENNSYLVANIA

DWG NO. 39217AD

JOB NO.	39217
SCALE 1:24	DATE
DRAWN BY LME	07APR23
CHECKED BY NPE	07APR23
SHEET SIZE D	SHEET NO. 1 OF 1

View File Created 17-JAN-2024 10:39:09