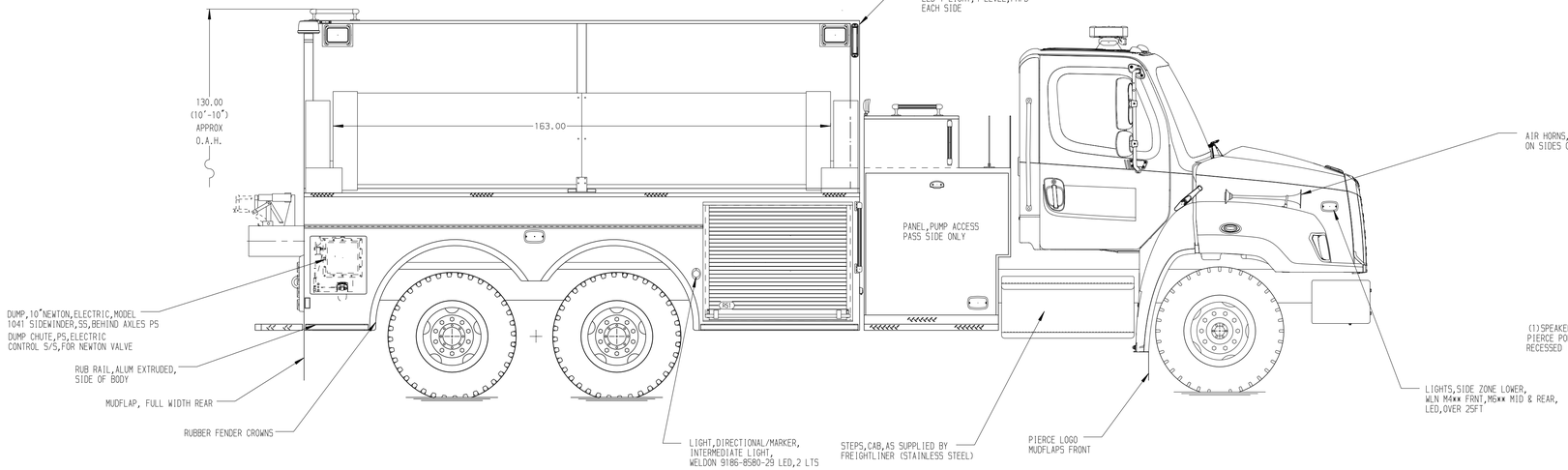

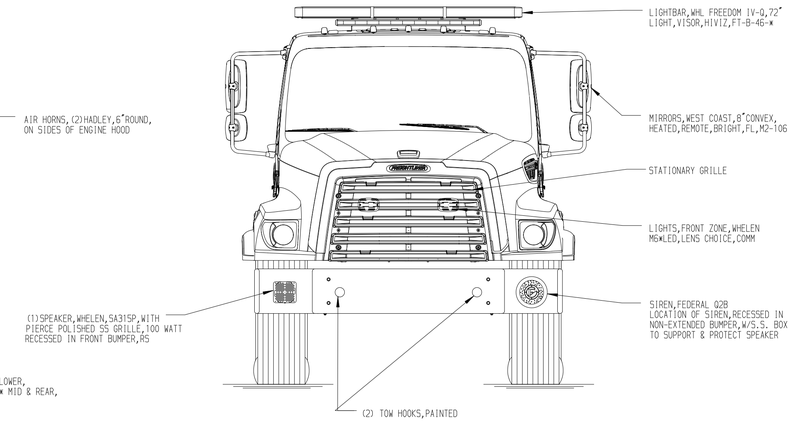

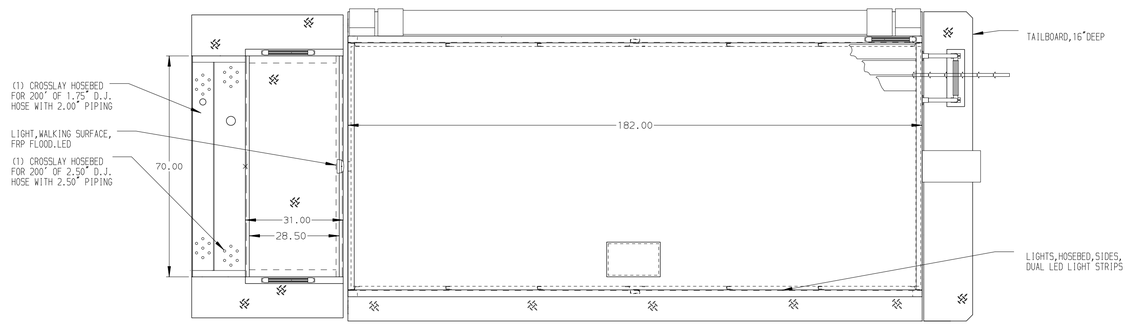

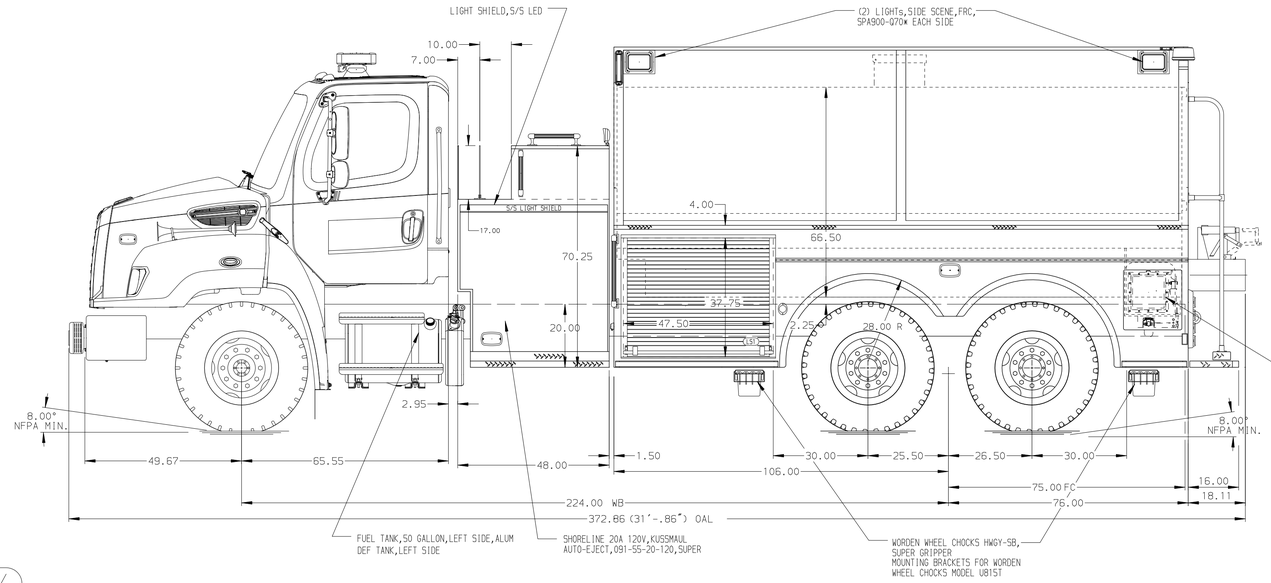

HOSEBED CAPACITIES

① 200' OF 2.50" D.J. POLY HOSE

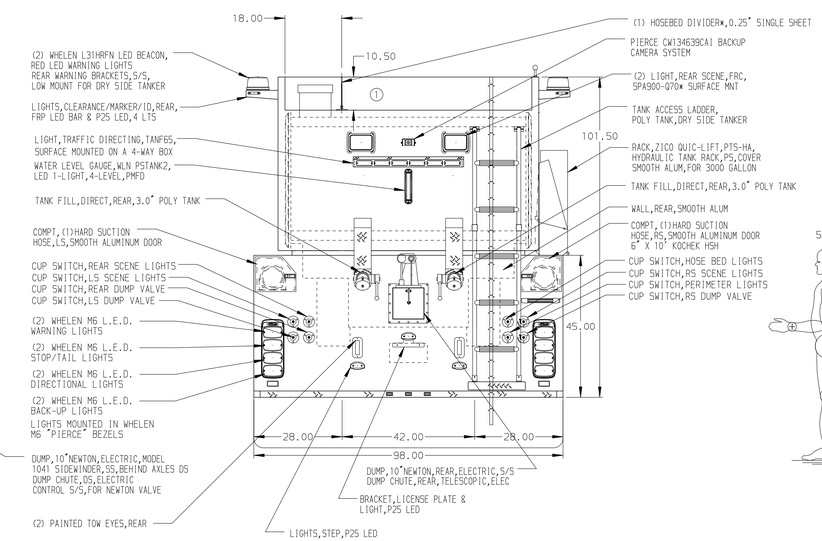

ALUMINUM BODY

NOTE

DIMENSIONS SHOWN ARE APPROXIMATE AND ARE SUBJECT TO MINOR DEVIATIONS AS MAY OCCUR OR BE NECESSARY IN CONSTRUCTION.
MINOR DETAILS NOT SHOWN.

REV	DATE	BY	CH
▽	-	-	-

Pierce MANUFACTURING INC.		JOB NO.	38440
		SCALE 1:24	DATE
CHASSIS DATA	TITLE	1500-D-3000P,182" DRYSIDE TANKER BODY 48"SIDE CONTROL,(1)1.5"CROSSLAY (1) 2.5" CROSSLAY	DRAWN BY RHU / 14FEB23
MAKE FL	FOR	UPPER MACUNGIE TOWNSHIP BREINIGSVILLE,PA	CHECKED BY AJA / 15FEB23
MODEL 114SD	DWG NO.	38440AD	SHEET SIZE D / SHEET NO. 1 OF 1

View File Created 15-FEB-2023 09:36:30