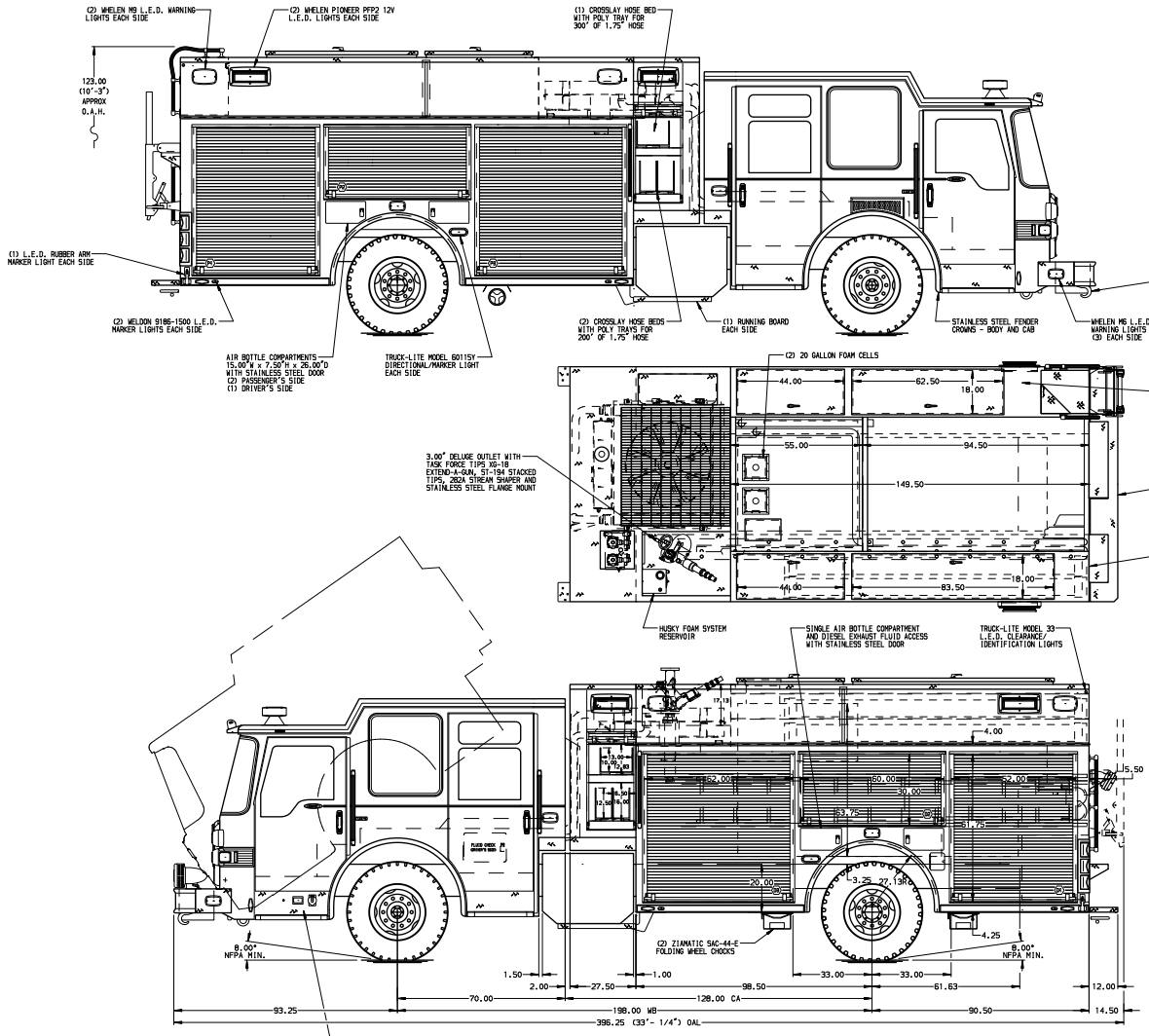

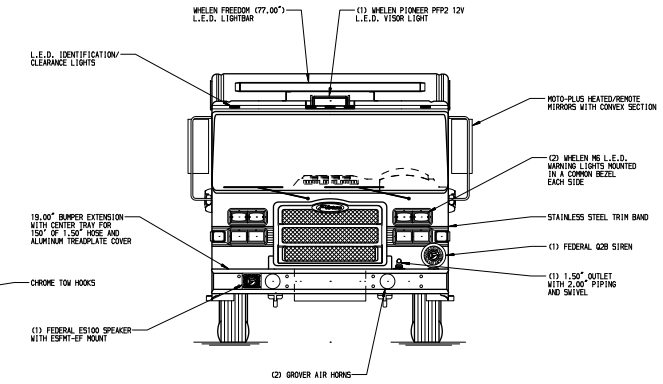

HOSEBED CAPACITIES
1. 300' OF 1.75" D.J. HOSE
2. 1200' OF 5.00" D.J. HOSE
3. 250' OF 2.50" D.J. HOSE

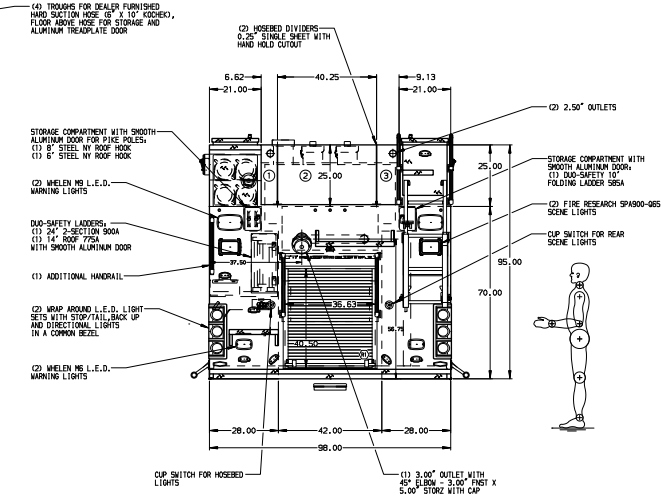

ALUMINUM BODY

MAXIMUM O.A.H. 123.00"

CUSTOMER APPROVAL
APPROVED BY:
DATE:

Pierce MANUFACTURING INC.

JOB NO.	26519
SCALE	1:24
DATE	
DRAWN BY	JRO 11DEC12
CHECKED BY	CSH 11DEC12
SHEET SIZE	D
SHEET NO.	1 OF 1

REV	DATE	BY	CH
1	01MAR13	SHA	DTS
2	22JAN13	JRO	DTS
3	14DEC12	JRO	CSH

CHASSIS DATA
MAKE: PIERCE
MODEL: DAP7011

TITLE: 1500-D-1000P,960G WATER W/(2)20G FOAM CELLS,189" PUC CROSSLAYS, LADDERS THRU BODY, DELUGE, FOAM SYSTEM

FOR: PARADISE & LEAMAN PLACE FIRE COMPANY, PARADISE, PA

DWG NO. 26519AD

NOTE
DIMENSIONS SHOWN ARE APPROXIMATE AND ARE SUBJECT TO MINOR DEVIATIONS AS MAY OCCUR OR BE NECESSARY IN CONSTRUCTION.
MINOR DETAILS NOT SHOWN.

1. S/STL SCUFFPLATE ON EACH CAB DOOR JAMB
2. BATTERY CHARGER LOCATED UNDER THE CENTER CONSOLE AREA
3. PERIMETER SCENE LIGHTS LOCATED PER SHOP ORDER
4. PIERCE L.E.D. COMPARTMENT DUAL LIGHT STRIPS LOCATED PER SHOP ORDER
5. (1) 20A 120V DUPLEX RECEPTACLE LOCATED IN CAB PER SHOP ORDER
6. ADJUSTABLE FULL WIDTH/FULL DEPTH PAINTED SHELVES - (1) IN COMPARTMENT D1, (2) IN D3, (1) IN P1, (1) IN P2 AND (1) IN P3
7. ONE PAINTED ADJUSTABLE SLIDE-OUT TRAY IN COMPARTMENT R1
8. ONE VERTICAL BOLT-IN PARTITION BETWEEN COMPARTMENTS D1-R1 & P1-R1
9. ZONE DEFENSE CAM-313C BACK UP CAMERA ABOVE COMPARTMENT R1

View File Created 04-MAR-2013 07:30:19