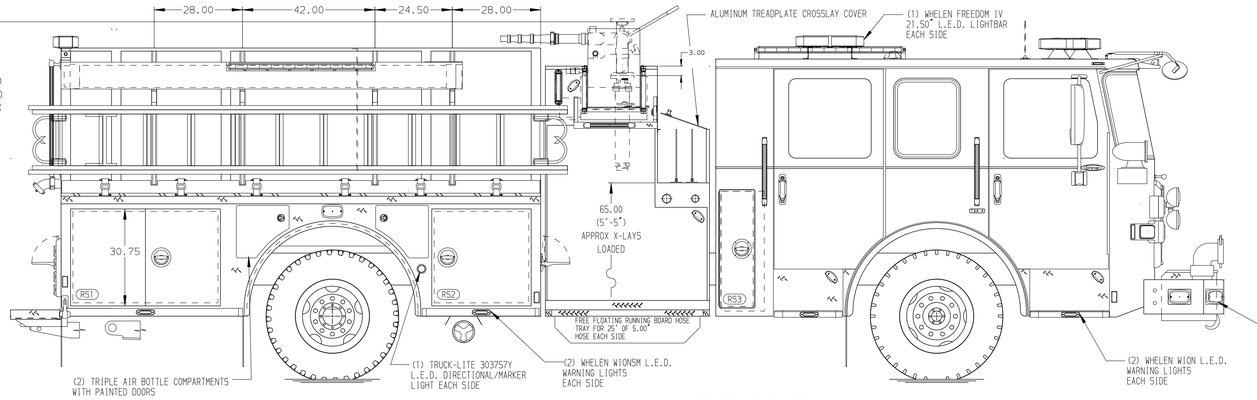

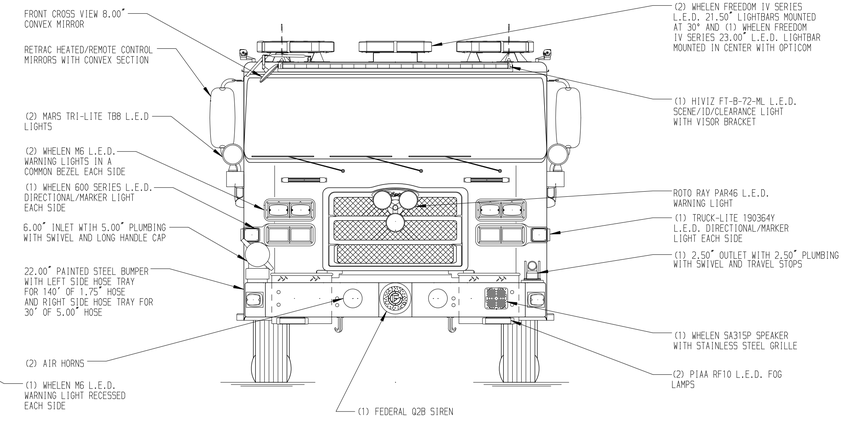

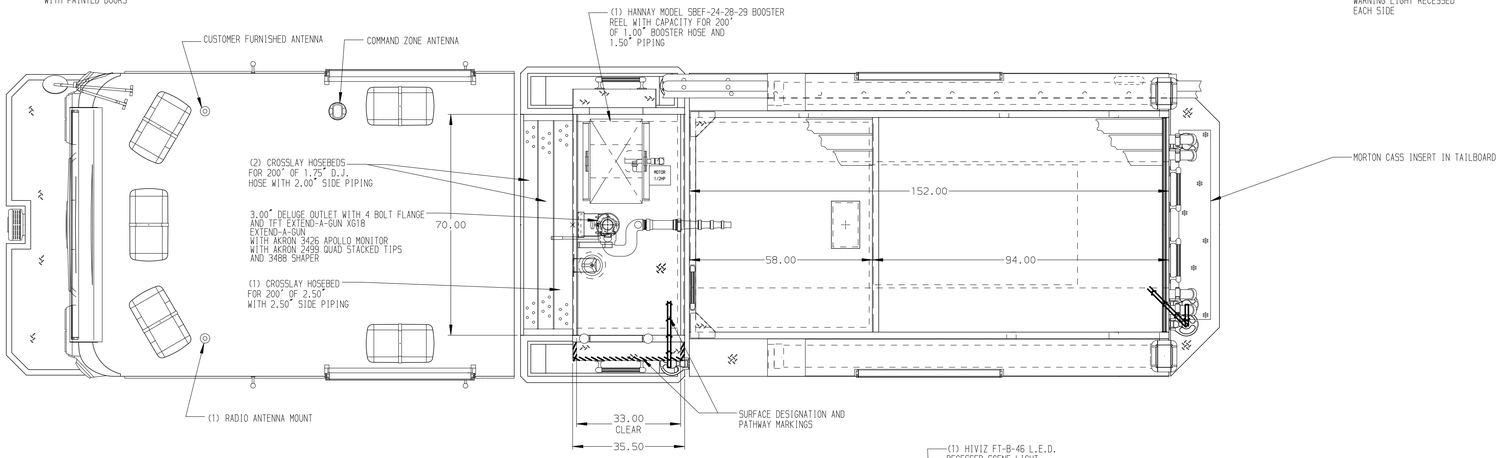

HOSEBED CAPACITIES

1. 300' OF 1.75" MERCEDES AQUAFLOW
2. 300' OF 2.50" MERCEDES AQUAFLOW
3. 300' OF 3.00" MERCEDES AQUAFLOW
4. 600' OF 3.00" MERCEDES AQUAFLOW
5. 1200' OF 5.00" MERCEDES MEGAFLOW
6. 300' OF 2.50" MERCEDES AQUAFLOW
7. 300' OF 1.75" MERCEDES AQUAFLOW

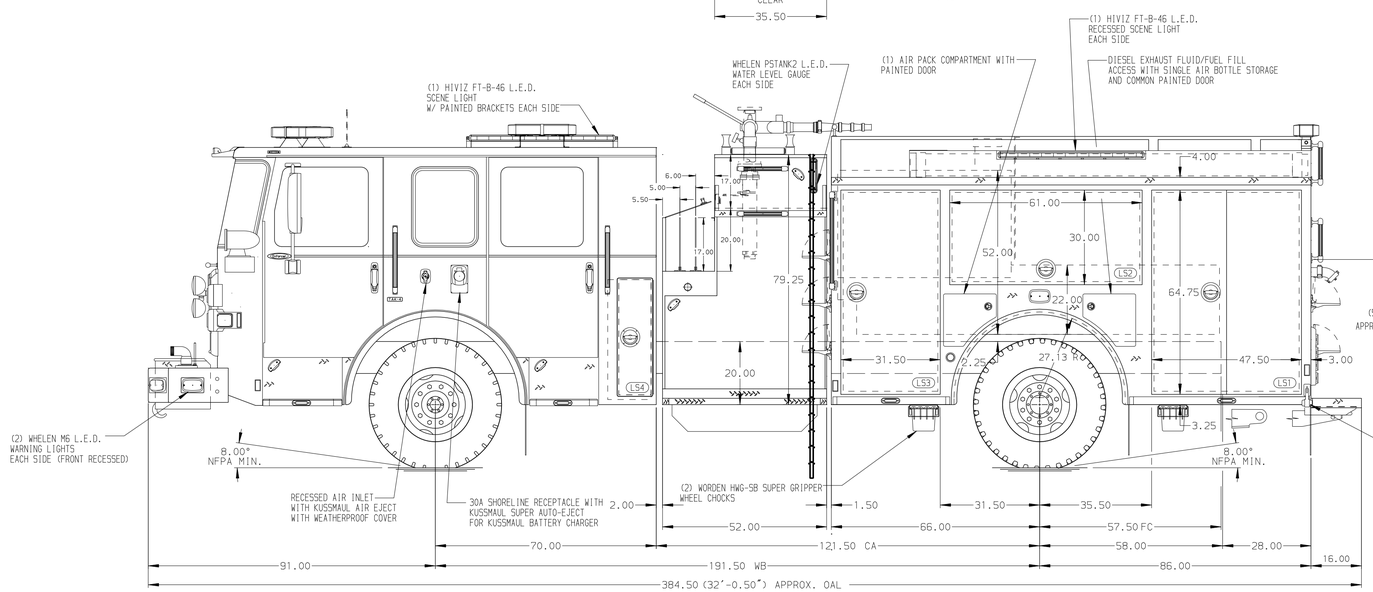

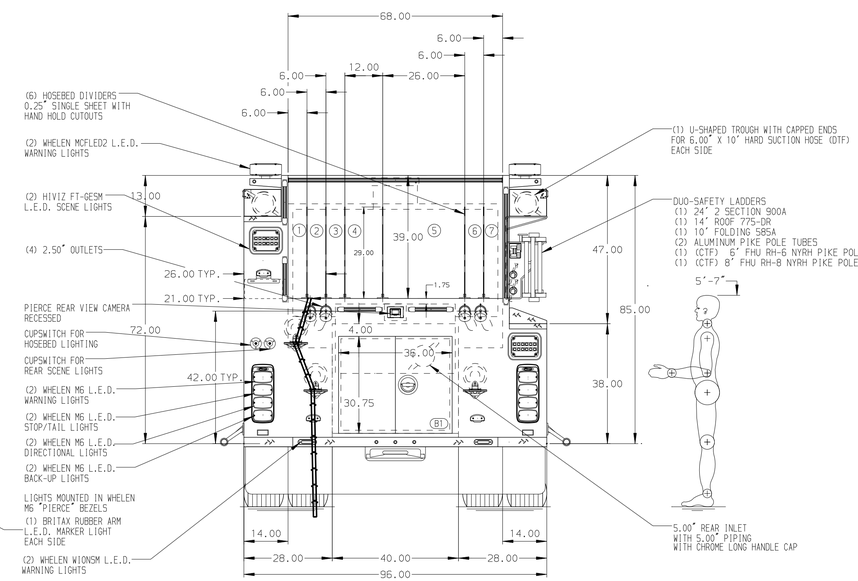

ALUMINUM BODY | MAXIMUM O.A.H. 117.00" | MAXIMUM O.A.L. 385.00" | SIDE ROLL AND FRONTAL IMPACT PROTECTION

NOTE

DIMENSIONS SHOWN ARE APPROXIMATE AND ARE SUBJECT TO MINOR DEVIATIONS AS MAY OCCUR OR BE NECESSARY IN CONSTRUCTION.
MINOR DETAILS NOT SHOWN.

1. ONSPOT AUTOMATIC TIRE CHAINS TO BE PROVIDED AT REAR
2. PAC TRAC IN CAB PER SHOP ORDER
3. BATTERY CHARGER LOCATED PER SHOP ORDER
4. BATTERY CHARGER INDICATOR LOCATED PER SHOP ORDER
5. DUAL L.E.D. LIGHT STRIPS LOCATED IN HOSE BED
6. L.E.D. LIGHT STRIP LOCATED ON THE FRONT OF THE HOSEBED
7. REVERSED HINGED DOOR FOR LS3
8. FIVE FULL WIDTH/DEPTH ADJUSTABLE SHELVES LOCATED PER SHOP ORDER
9. ONE FULL WIDTH/DEPTH FLOOR MOUNTED SLIDE-OUT TRAY WITH SIDE SLIDES LOCATED PER SHOP ORDER
10. PARTITION BETWEEN COMPARTMENTS LS1/B1 AND RS1/B1
11. ONE VERTICAL PARTITION LOCATED PER SHOP ORDER
12. FOUR DRAIN HOLES WITH SPLASH GUARD LOCATED PER SHOP ORDER
13. THREE ALUMINUM PEGBOARDS ON BACK WALL PER SHOP ORDER
14. SIX 120V NEMA DUPLEX RECEPTACLES LOCATED PER SHOP ORDER

CUSTOMER APPROVAL

APPROVED BY: _____

DATE: _____

REV	DATE	BY	CH
▽	-	-	-

CHASSIS DATA	
MAKE	PIERCE
MODEL	ENFORCER

Pierce MANUFACTURING INC.

TITLE: 1500-D-750P,152" PUMPER BODY,LS FH FDLR,RS LOW RIGHT SIDE LADDER BRACKETS,52" SIDE CONTROL,DELUGE

FOR: HAMPDEN TOWNSHIP VOLUNTEER FIRE COMPANY
MECHANICSBURG, PENNSYLVANIA

DWG NO. 37658AD

JOB NO.	37658
SCALE	1:24
DATE	
DRAWN BY	LST 15AUG22
CHECKED BY	WKL 15AUG22
SHEET SIZE	D
SHEET NO.	1 OF 1

View File Created 15-AUG-2022 09:10:56