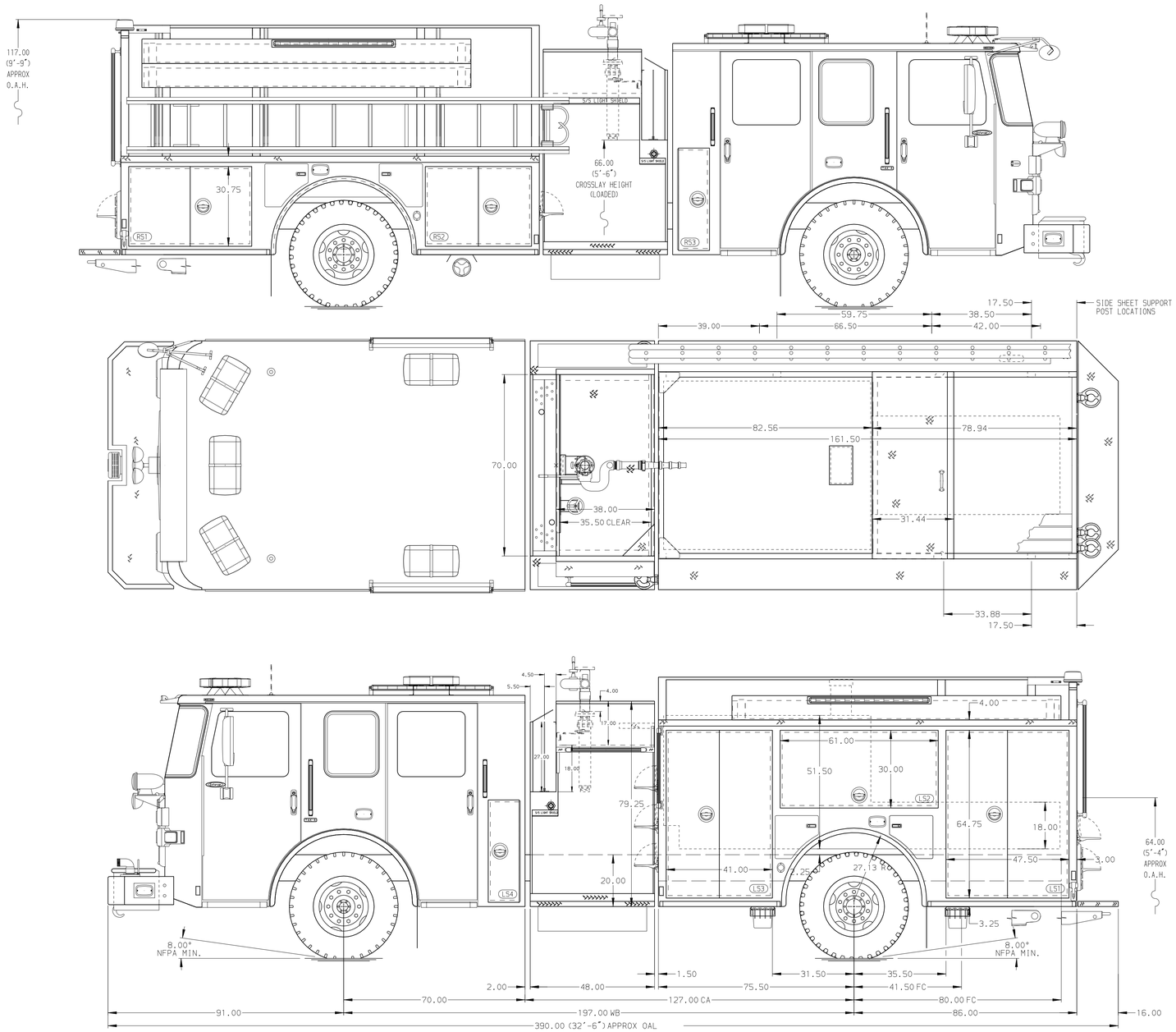

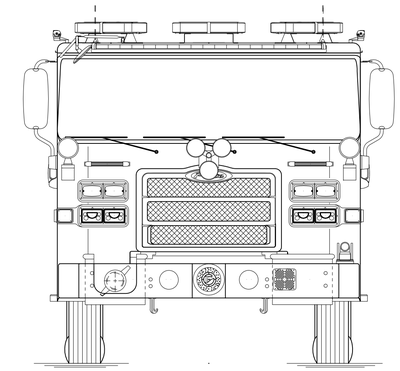

HOSEBED CAPACITIES

1. 200' OF 1.75" MERCEDES AQUAFLOW HOSE
2. 300' OF 1.75" MERCEDES AQUAFLOW HOSE
3. 1000' OF 3.00" MERCEDES AQUAFLOW HOSE
4. 1500' OF 4.00" MERCEDES MEGAFLOW HOSE
5. 400' OF 1.75" MERCEDES AQUAFLOW HOSE
6. 200' OF 1.75" MERCEDES AQUAFLOW HOSE

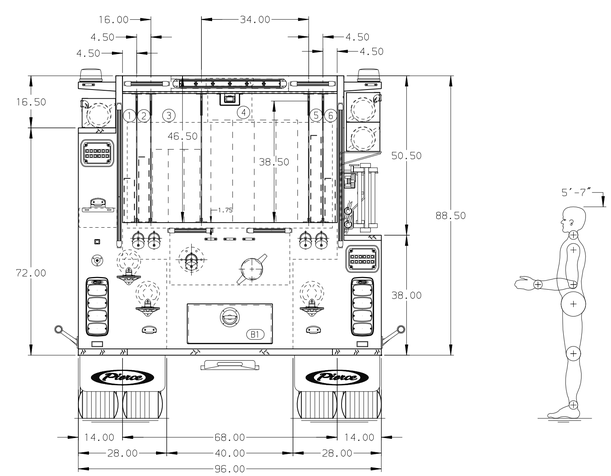

ALUMINUM BODY | MAXIMUM O.A.L. 390" | MAXIMUM O.A.H. 117" | SIDE ROLL AND FRONTAL IMPACT PROTECTION

NOTE

DIMENSIONS SHOWN ARE APPROXIMATE AND ARE SUBJECT TO MINOR DEVIATIONS AS MAY OCCUR OR BE NECESSARY IN CONSTRUCTION.
MINOR DETAILS NOT SHOWN.

REV	DATE	BY	CH
▽	-	-	-

CUSTOMER APPROVAL

APPROVED BY: _____

DATE: _____

Pierce MANUFACTURING INC.

CHASSIS DATA	
MAKE	PIERCE
MODEL	ENFORCER
TITLE	1500-D-1000P, 161" BODY, FDLER (2) CROSSLAYS, DELUGE, RS LADDER BRACKETS
FOR	ALLIANCE FIRE RESCUE SERVICES BID# 782 GLICK FIRE EQUIPMENT CO, INC CYLE SHEAFFER
DWG NO.	05-0900
JOB NO.	PRELIM
SCALE	1:24
DATE	
DRAWN BY	LME 22SEP22
CHECKED BY	NPA 23SEP22
SHEET SIZE	D
SHEET NO.	1 OF 1