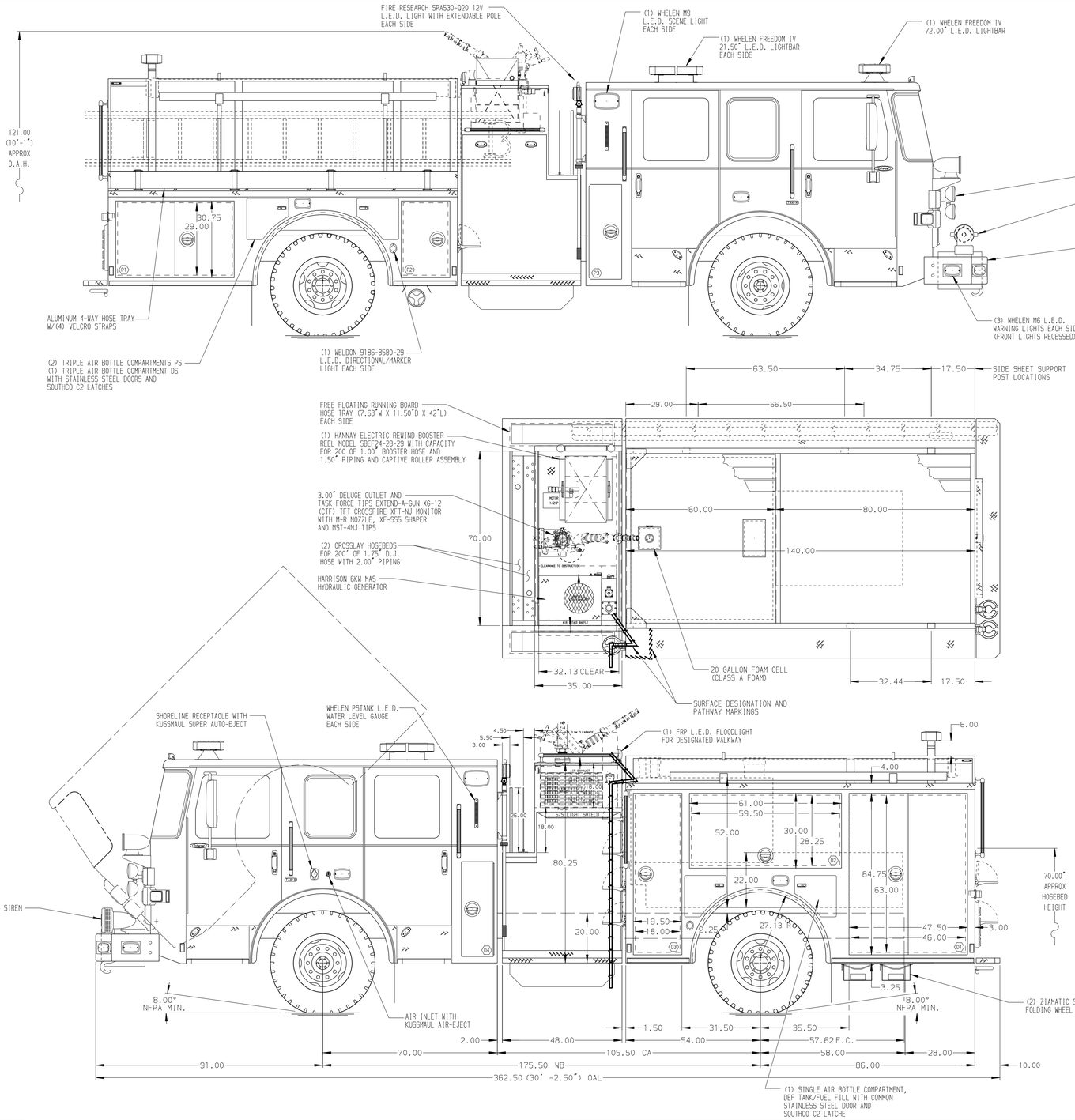

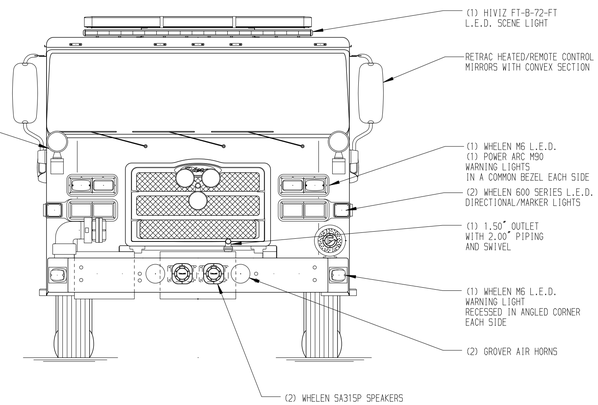

HOSEBED CAPACITIES

1. 200' OF 1.75" DJ HOSE
2. 250' OF 2.50" DJ HOSE
3. 1000' OF 4.00" DJ HOSE
4. 800' OF 3.00" DJ HOSE
5. 400' OF 1.75" DJ HOSE
6. 200' OF 1.75" DJ HOSE

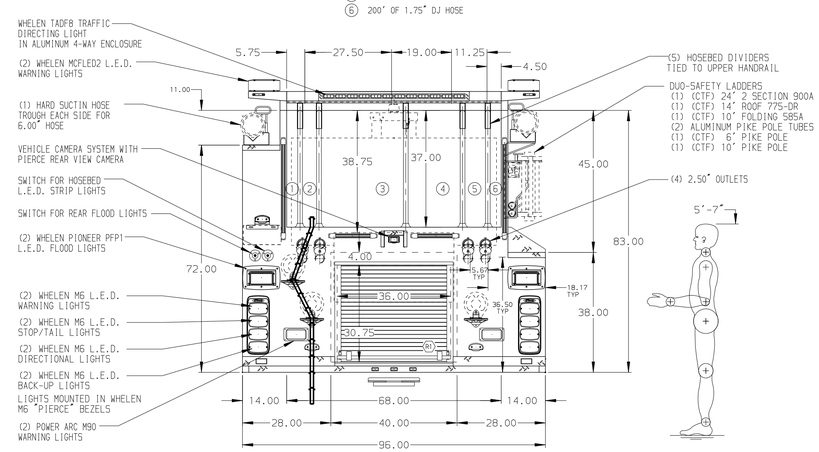

ALUMINUM BODY

SIDE ROLL AND FRONTAL IMPACT PROTECTION

NOTE

DIMENSIONS SHOWN ARE APPROXIMATE AND ARE SUBJECT TO MINOR DEVIATIONS AS MAY OCCUR OR BE NECESSARY IN CONSTRUCTION.
MINOR DETAILS NOT SHOWN.

1. BATTERY CHARGER LOCATED BEHIND DRIVER SEAT
2. BATTERY CHARGER INDICATOR LOCATED AT DRIVER'S SIDE SEAT RISER
3. DUAL L.E.D. LIGHT STRIPS LOCATED IN HOSE BED
4. REVERSED HINGED DOOR ON COMPARTMENTS D3 & P2
5. ONE FLOOR MOUNTED SLIDE-OUT TRAY IN COMPARTMENT P1
6. PARTITION BETWEEN COMPARTMENTS P1/R1
7. ONE VERTICAL PARTITION IN COMPARTMENT D1
8. ALUMINUM PEGBOARD WITH TRACKS ON THE REAR WALL OF COMPARTMENTS D3 & P2
9. AKRON EDUCTOR SINGLE AGENT FOAM SYSTEM
10. CIRCUIT BREAKER PANEL IN COMPARTMENT D3
11. ONE (4) PLACE FIRE EXTINGUISHER STORAGE BIN IN COMPARTMENT D1
12. AIR OUTLET WITH SHUT OFF VALVE LOCATD ON D5 PUMP PANEL
13. DRIP PAN GUARD FOR ROLL-UP DOOR LOCATED IN COMPARTMENT R1
14. ONE FULL WIDTH/DEPTH ADJUSTABLE SHELF IN COMPARTMENTS D2, D3 & P1, (2) IN P2, (3) IN D1
15. ZIAMATIC SCBA HOLDER BRACKET LOCATED IN COMPARTMENT D3
16. TWO 15A, 120V 6-PLACE DUPLEX RECEPTACLE STRIPS IN CAB
17. ONE AKRON ELECTRIC REWIND CORD REEL WITH 200' OF 10/3 CABLE AND AKRON JUNCTION BOX IN COMPARTMENT D1

REV	DATE	BY	CH
3	16MAR18	CUP	DTS
2	19FEB18	CUP	DTS

CHASSIS DATA	
MAKE	PIERCE
MODEL	ENFORCER
TITLE	1500-D-770P, 750 WATER W/20 GAL FOAM, 140" BODY SIDE CONTROL, (2) CROSSLAYS, DELUGE, GENERATOR
FOR	WHITEHALL TWP BUREAU OF FIRE WHITEHALL, PENNSYLVANIA
DWG NO.	31981AD

Pierce MANUFACTURING INC.

JOB NO.	31981
SCALE	1:24
DATE	
DRAWN BY	CUP
	12DEC17
CHECKED BY	NPA
	18DEC17
SHEET SIZE	D
SHEET NO.	1 OF 1

View File Created 19-MAR-2018 07:15:43